DEPARTMENT OF SOIL & WATER CONSERVATION

DETAILED PROJECT REPORT
OF
ARIM MICRO WATERSHED
UNDER
INTEGRATED WATERSHED MANAGEMENT PROGRAMME - V
(IWMP-V)

TURA SOIL & WATER CONSERVATION (T)DIVISION
WEST GARO HILLS, MEGHALAYA.
*****

DETAILED PROJECT REPORT

ARIM - INTEGRATED WATERSHED MANAGEMENT PROJECT

IWMP – V

2011 – 2012

RONGRAM C & RD BLOCK

WEST GARO HILLS DISTRICT

MEGHALAYA

SUMMARY

Name of the Sate	:	Meghalaya
Name of the District	:	West Garo Hills District
Name of the C&RD Block	:	Rongram
Name of the Villages	:	(i) Wakrintonggre
		(ii) saringre
Name of the Project	:	West Garo Hills – IWMP – V
Total Geographical Area	:	376.90 Ha.
Total Treatment Area	:	250.00 Ha
Total Project Cost	:	37.50 lakhs
Project Duration	:	5 Years
Project Implementing Agency	:	Soil & Water Conservation Territorial Division,Tura.

TABLE OF CONTENTS

CHAPTER I INTRODUCTION AND BACKGROUND **7**

CHAPTER II BASIC INFORMATION OF THE PROJECT AREA **10**

CHAPTER III PROJECT PLANNING & INSTITUTION BUILDING **21**

CHAPTER IV PROJECT ACTIVITIES **26**

CHAPTER V PROJECT PHASING & BUDGETING ..... 40.

CHAPTER VI CAPACITY BUILDING **7**

CHAPTER VII EXPECTED OUTCOME **11**

ANNEXURE I MAPS **28**

ANNEXURE II SOCIO-ECONOMIC SURVEY DETAILS **36**

ANNEXURE III COST ESTIMATES **40**

ANNEXURE IV MoA, NOC, LIST OF BENEFICIARIES S ETC. **61**

CHAPTER I
INTRODUCTION AND BACKGROUND

CHAPTER I

INTRODUCTION AND BACKGROUND

1.1 Project Background:

The Arim (IWMP-V) project is located in Rongram C&RD Block, West Garo Hills District of Meghalaya. Consisting of a single micro-watershed, the project area is drained by the Ringgi River and its tributaries flowing in a north to east to south direction. The total area is 376.90 Ha. with 250.00 Ha. to be treated under the Integrated Watershed Management Programme (IWMP).

The Project area is located at a distance of about 16 km from Rongram C.& R.. D. and about 31 km from Tura the District Headquarter. Two village is covered under the project. That is –

1. Wakringtonggre
2. Saringre
3.

1.2 Micro-watershed Information:

The total area of the micro-watershed is 376.90 Ha., with 250 hectares to be treated under the Integrated Watershed Management Programme (IWMP).

1.3 Need and Scope for Watershed Development:

Located on the slopes of the deep gorges of the Arbella Plateau the villages have one road connectivity. The farmers are all marginal and 32 households are below the poverty line, which is 64 % of the total households. Jhum cultivation is practiced by most of the inhabitants of these villages on the slopes.

Even though the area receives ample rainfall during the monsoons, there is acute shortage of water during the dry seasons and the villagers have to travel long distances for fetching water even for domestic use.

1.4 Other developmental projects/schemes running in the Project Area:

The other developmental projects/schemes undertaken in the Project Area are:-

i. MGNREGS

CHAPTER II

BASIC INFORMATION OF THE PROJECT AREA

CHAPTER II
BASIC INFORMATION OF THE PROJECT AREA

2.1 Location:

The Project area is located within the area of Nokma under Rongram C&RD Block of West Garo Hills District. It is situated at a distance of about 16 km from Rongram C.& R. D. Block and about 31 km from Tura the District Headquarter .The geographical location is between 90^0 19' to 90^0 20' 55"E Longitude and 25^0 34' to 25^0 80' 18"N Latitude. There are 2 village within the Watershed area which is as follows –

1. Wakringtonggre
2. Saringre

At present, this village is connected to seasonal motorable road.

2.2 Physiography:

The physiography of the micro-watershed is highly undulating. The altitude ranges from a minimum of 300m to a high of 690 above mean sea level. In the lower reaches (valley lands) the slope ranges from 20% to 40%, however, in the middle and upper reaches it is greater than 45 %, and can reach up to 180%.

Table 2.1: Physiographic details

Elevation (metres)	Slope Range (%)	Order of watershed Sub/Micro-watershed	Major streams	Topography
300 m to 690m	<5% - > 50%	Second Order	Arim	Strongly Sloping

2.3 Drainage: The major stream draining the micro-watershed is the Ringgi which is a 2nd order stream flowing in east-south direction. The slopes of the micro-watershed are dissected by numerous small tributaries flowing to the Ringgi.

2.4 Soil: Soil Texture is gravelly on the sloping lands and clayey to sandy clay on the low lying areas. Soil depth varies from very shallow to deep. Soils are permeable and generally acidic in nature. Owing to highly undulating land form and absence of good vegetation cover, the area is exposed to erosion hazards. The soil nutrient status in the area shows a general trend of low phosphorous content.

Table 2.2: Details of soil erosion in the project areas:

1	2	3	4	5	6	7	8	9
Sl. No.	Names of State	Names of District	Names of Projects	Cause	Types of erosion	Area affected (ha)	Run-off (mm/ year)	Average soil loss (Tonnes/ ha/ year)
1	Meghalaya	West GaroHills	West Garo Hills – IWMP V	Water erosion:				
				a	Sheet	330	2000-3000	35
				b	Rill	120	2000-3000	15
				c	Gully	23	2000-3000	1
				Sub total				
				Wind erosion		Nil	Nil	Nil

2.5 Climate: The area in the foothills or low lying areas and mid-slopes are hot in summer and cold throughout the winter. The area on the higher reaches is warm during summer and cold during winter. The average annual rainfall is 9000mm.

Table 2.3: Agro-climatic zones of the project areas, soil types, average rainfall and major crops.

1	2	3	4	5	6	7		8	9	
Sl. No.	Name of State	Name of the Agro-climatic zone	Area (in ha)	Names of the districts	Names of the Projects	Major soil types		Average annual rainfall in mm (preceding 5 years' average)	Major crops	
						a) Type	b) Area (ha)		a) Name	b) Area (ha)
1	Meghalaya	Southern Slopes and Valley	376.90 Ha	West Garo Hills	West Garo Hills – IWMP – V	Deep, somewhat excessively drained, fine – loamy soil on moderately steep side slopes of hills having loamy surfaces with erosion hazard associated with moderately deep, excessively drained, loamy soils on gently sloping hill tops with erosion hazard and slight stoniness	376.90 Ha	9000 mm	Betel nut	2
									Betel leaf	1
									Bay leaf	1
									Ginger	7
									Chilli	3
									Squash	1.79
								Total		**15.79Ha**

2.6 Agriculture: Agriculture is the primary occupation of the people of the area. The people mostly practice jhum. The jhum plots vary from 0.5 to 1.0 Ha, and are cultivated for 1-2 years. The principal agricultural crops grown of the jhum fields are paddy, ginger, millet, maize, yam and vegetables. Fruit crops are well suited in the lower reaches which include orange, pineapple, jackfruit, litchi. The slopes of the Lower Ringgi Bisik are also very suitable for betel nut, betel leaf, black pepper, broomstick, which contribute to the income of the people.

Table 2.4: Crop yield and production

Crops	Area (ha)	Average Yield (Qtl) per ha.	Total Production (Qtl.)
Ginger	40	40	1600
Millet	25	20	500
Squash	15	30	450
Yam	20	25	500
Chilli	20	50	1000
Tapioca	10	40	400
Betel nut	30	25	750
Betel leaf	5	15	75
Bay Leaf	5	10	50

2.7 Natural Vegetation: The tree species common to the watershed area includes - *Terminalia*spp. *Schima walichii*. *Toona ciliata*, *Albizia* spp. *Aporosa* spp. *Bahunia variegata Duabanga* spp. and *Ficus* spp. However, due to jhum cultivation the forest cover of the area has reduced considerably.

2.8 Socio-Economic Profile: Economically, the area is perhaps the most backward in the district. The main reason is due to poor road communication, primitive way of agricultural practices like jhumming and the difficult terrain of the area.

Demographic Status: The total households in the watershed project is 50 with a total population of 250, of which 115 are male and135 are female.

Infrastructure facilities **:**

2.1.1 *Roads:* The Project Area is connected by a seasonal road. The Project area depends entirely on the kutcha road connected to Waribokgre.

2.1.2 *School:* there are only 2(two) L.P School within the Project Area run by the state Government.

2.1.3 *Electricity :* Ther is no connection and the village is yet to have electricity

2.1.4 *Health :* There is no Health Centre nearby and the entire local population have to either depends on facilities available at Asanang P.H.C. or Tura.

2.1.5 *Water Supply :* There is no Drinking water supply provided by the PHE Deptt.. However, during lean season the entire population have to depend on springs available in the area as the supply is not sufficient to meet the daily requirement.

2.1.6 *Market :* There is a weekly market held once in a week at Jengjal. However, the main market where the people sell their produce is at Jengjal and Rongram

Table 2.5: Infrastructure Status.

1	2	3		4			
Name of District	Name of Project	Parameters:		Status			
West Garo Hills	West Garo Hills – IWMP V	(i)	No. of villages connected to the main road by an all-weather road.	All villages are at 2 hr to 4 hrs walking from the motorable junction			
		(ii)	No. of village provided with electricity	nil			
		(iii)	No. of households without access to drinking water	25 nos.			
		(iv)	No. of educational institutions: Primary (P)/ Secondary (S)/ Higher Secondary (HS)/ Vocational institution (VI)	(P)	(S)	(HS)	(VI)
				2 No.	-	-	-
		(v)	No. of village with access to Primary Health Centre	Nil			
		(vi)	No. of village with access Veterinary Dispensary	Nil			
		(vii)	No. of village with access Post Office	Nil			
		(viii)	No. of village with access Banks	Nil			
		(ix)	No. of village with access Markets/ mandis	Nil			
		(x)	No. of village with access Agro-Industries	Nil			
		(xi)	Total quantity of surplus milk	Nil			
		(xii)	No. of milk collection centres (e.g. Union (U)/ Society (S)/ Private agency (PA)/ Others (O))	(U)	(S)	(PA)	(O)
				Nil	Nil	Nil	Nil
		(xiii)	No. of villages with access to Aganwadi Centres	1 No.			
		(xiv)	Any other facilities with no. of villages (please specify)	Nil			

2.9 Livestock: there are only 4 kinds of livestock farming being farmed in the area viz. Piggery, Poultry , cattle and Goatery.

Table 2.6: Existing livestock population

Type of Animal	Population
Piggery	22
Poultry	275
Cattle	61
Goatery	28

2.10 Land ownership: There are primarily two types of land holding system, namely private lands (. individually owned land) and community lands (i.e. clan land).

Table 2.7: Land Holding:

1	2	3	4	5	6		
Name of District	Name of the Project	Types of Farmer	No. of households	No. of BPL households	Land holding (ha)		
					Irrigated	Rainfed	Total
West Garo Hills	West Garo Hills – IWMP V	(i) Large	-	-			
		(ii) Small	-	-			
		(iii) Marginal	43	46	-	36 Ha	36 Ha
		(iv) Landless	7	4	-	-	-
		Sub - Total	50	50		36 Ha	36 Ha

Table 2.5: Common Property Resources in the Project Area

1	2	3	4				5			
Name of District	Name of the Projects	CPR Particulars	Total Area (ha) Area owned/ In possession of				Area available for treatment (ha)			
			Pvt. Person	Govt. (specify deptt.)	PRI	Any other (Community)	Pvt. Person	Govt. (specify deptt.)	PRI	Any other (Community)
West Garo Hills	West Garo Hills – IWMP V	Agri-Kharif	15.79	-	-		10.00	-	-	-
		Horticulture	85.14	-	-		45.00	-	-	-
		Tree clad open	215.9	-	-	30.00	115.03	-	-	50.00
		Current jhum	29.97	-	-		19.97	-	-	10.00
								-	-	
								-		
		Total	346.80 Ha	**-**	**-**	**30.00 Ha**	**190.00 Ha**	**-**	**-**	**60.00 Ha**

2.11 Land use and land cover : As per the land use land cover map generated by NESAC, Meghalaya from Satellite Image taken during 2005 – 2006 (LISS – III, Image) the Watershed area has been broadly classified into the following land uses.

a)	Current jhum	=	29.97 Ha
b)	Horticulture plantation	=	85.14 Ha
c)	Agricultural land-crop land-kharif crop	=	15.79 Ha.
d)	Tree clad Area-open	=	245.90 Ha
	Total	=	376.90 Ha

2.12 Problems of the Area : The primary problems of the area is jhumming. Majority of the population depends on Jhum Cultivation for their livelihood. Vast tracks of Jhum areas are abandoned which has further degraded the capability of the land. Mention may also be made here that the land use categorized as Tree-clad Area-open in the land used land cover map is jhum cultivation areas. In other words, unscientific method of cultivation has not only reduced the Jhum cycle, low crop yield but had adversely affected the ecological balance within the area. Road communication is another infrastructural problems that the area is facing where large volume crops like pineapple, jackfruits etc do not find their way into the market which has resulted in poor socio-economic status of the people. However, to control or to overcome the said problems an innovative approach has been formulated and documented in the Action Plan or the Treatment Plan the Detailed Project Report. The method of identification of the problems is through the Participatory Rural Appraisal Exercises conducted in all the villages within the Watershed.

CHAPTER III

PROJECT PLANNING & INSTITUTION BUILDING

CHAPTER III

PROJECT PLANNING & INSTITUTION BUILDING

3.1 Scientific Planning

i) Base Line Survey: To establish a benchmark for assessing the impact of any intervention (pre-project & post project) a baseline survey is essential. The baseline survey included household census & socio-economic survey by using structured and semi –structured questionnaires, bio-physical survey to identify and assess the status of natural resources in the project area.

ii) Participatory Rural Appraisal: To further obtain information on the project area, the people, resources, various PRA techniques like resource mapping, social mapping, seasonal calendars, matrix ranking, Venn diagrams were used.

iii) GIS & Remote Sensing: To facilitate the process of prioritization and planning Geographic Information System was use. The land use and land cover (LULC) maps were prepared. The activities were located on the field by using GPS and accordingly transferred to the maps on GIS platform.

Table 3.1: Details of Scientific Planning and Inputs in IWMP projects:

1	2	2
Sl.No.	**Scientific criteria/ inputs used**	**No. of projects in which scientific criteria were used**
A.	**Planning**	
	Cluster approach	Yes
	Whether technical back-stopping for the project has been arranged? If yes, mention the name of the Institute.	Yes
	Baseline survey	Yes
	Hydro-geological survey	Yes
	Contour mapping	Yes
	Participatory Net Planning (PNP)	Yes

1	2	2
	Remote sensing data-especially soil/ crop/ run-off cover	Yes
	Ridge to Valley treatment	Yes
	Online IT connectivity between	
	(1) Project and DRDA cell/ZP	Yes
	(2) DRDA and SLNA	Yes
	3 SLNA and DoLR	Yes
	Availability of GIS layers	

	1. Cadastral map	No
	2. Village boundaries	Yes
	3. Drainage	Yes
	4. Soil (Soil nutrient status)	Yes
	5. Land use	Yes
	6. Ground water status	No
	7. Watershed boundaries	Yes
	8. Activity	Yes
	Crop simulation models#	No
	Integrated coupled analyzer/ near infrared visible spectroscopy/ medium spectroscopy for high speed soil nutrient analysis	No
	Normalized difference vegetation index (NDVI)#	Yes
	Weather Stations	No
B.	**Inputs**	
	1. Bio-pesticides	No
	2. Organic manures	Yes
	3. Vermi-compost	Yes
	4. Bio-fertilizer	No
	5. Water saving devices	Yes
	6. Mechanized tools/ implements	No
	7. Bio-fencing	Yes
	8. Nutrient budgeting	Yes
	9. Automatic water level recorders & sediment samplers	Yes
	Any other (please specify)	-

3.2 Project Implementing Agency:

The PIA is the Soil & Water Conservation Territorial Division, Tura, West Garo Hills District of Meghalaya. The Project Manager will be the Divisional Soil and Water Conservation Officer and will be assisted by an Asst. Soil & Water Conservation Officer along with WDT members in which expertise is drawn from the relevant fields for achieving smooth and successful implementation of the project.

1	2	3	
Names of Districts	Names of projects	Details of PIA	
West Garo Hills	West Garo Hills – IWMP V	(i) Type of organization#	Government
		(ii) Name of organization	Soil & Water Conservation (T) Division, Tura
		(iii) Designation & Address	Divisional Soil & Water Conservation Officer, Tura
		(iv) Telephone	03651 - 222352
		(v) Fax	
		(vi) E-mail	

3.3 Institution Building

i) Watershed Committee (WC)

The Watershed Committee of the Arim, IWMP V was constituted with the active involvement of the villagers with strong support of the Traditional Institutions (Village Council). The Arim Watershed Committee has been registered under the Society Registration Act 1860.

Table 3.2: Details of Watershed Committees (WC):

1	2	3	4	5	6	7	8	9	10	11	12	13	14	15	16	17	18
Names of the Districts	Names of projects	Names of WCs	Date of Registration as a Society (dd/mm/yyyy)	Designation	M/F	SC	ST	SF	MF	LF	Land-less	UG	SHG	GP	Any other	Educa-tional 22ualify-cation	Function/s assigned#
West Garo Hills District	West Garo Hills District – IWMP – V	Arim		Chairman	M	-	ST									Cl – X	A to I
				Secretary	M	-	ST									B.E	A to I
				Member	6 M	-	ST									Cl – VI	Do
				Member	3 F	-	ST										Do
				Member													

A. PNP and PRA
B. Planning
C. Maintenance of Accounts
D. Signing of cheques and making payments
E. Supervision of construction activities
F. Cost Estimation
G. Verification & Measurement
H. Record of labour employed
I. Social Audit
J. Any other (please specify).

ii) Self Help Group

Awareness programmes were organized in the villages to inform and sensitize the people on the essence of organizing themselves in to homogenous groups for uplifting their livelihood especially for the women and the landless. Discussions were held at length with the WDT on the scope and procedure of group formation, availing credit, grading of the groups and so on.

Table 3.3: Details of Self Help Groups (SHGs) in the project areas:

1	2	3				4				5			6		
Names of the Districts	Names of projects	Total no. of registered SHGs				No. of members				No. of SC/ST in each category			No. of BPL in each category		
		With only Men	With only Women	With both	Total	Categories	M	F	Total	M	F	Total	M	F	Total
West Garo Hills	WGH IWMP V	-	-	1 no	1 No	(i) Landless									
						(ii) SF									
						(iii) MF	6	6	12	6	6	12	6	6	12
						(iv) LF									

iii) User Group

To manage the assets created and ensure their sustainability User Groups will be formed. The people have been sensitized on the importance of ensuring that the assets created are sustainably used and the essentiality of having User Groups for maintenance and operation of their assets.

Table 3.4: User Group Details

1	2	3				4				5			6		
Names of Districts	Names of Projects	Total no. of Ugs				No. of members				No. of SC/ST in each category			No. of BPL in each category		
		Men	Women	Both	Total	Categories	M	F	Total	M	F	Total	M	F	Total
						(i)Landless									
						(ii) SF									
						(iii) MF									
						(iv) LF									
Total		Nil	Nil	Nil	Nil				Nil			Nil			Nil

CHAPTER IV

PROJECT ACTIVITIES

CHAPTER IV
PROJECT ACTIVITIES

4.1 Preparatory Phase:

i) Entry Point Activities (EPA)

(Financial – Rs. in lakh)

1	2	3	4	5	6	7	8	9	10	11
Sl. No.	State	District	Names of Project	Amount earmarked for EPA	Entry Point Activities planned	Estimated cost	Expenditure incurred	Balance	Expected outcome	Actual outcome
1	Megh alaya	West Garo Hills	West Garo Hills – IWMP V	1.5 Lakhs	Construction of Spring Chamber/Water Tanks Construction of Ringwell	1.20 0.30	1.5	-	-	-

ii) Other activities of Preparatory Phase:

1	2	3	4	5	6	7	8	9	10	11	12	13
District	Name of Projects	Initiation of village level institution	Capacity building	IEC activities	Baseline survey	Hydro-geological survey	Identifying technical support agencies	Resource agree-ments	Preparation of DPR	Evaluation of DPR	Any other (please specify)	Cost incurred (Rs. In lakh)
West Garo Hills	West Garo Hills – IWMP V	1 no. W/C 8 nos. Watershed Committee members	3 nos.	2 nos.	Participatory Rural Appraisals	N.A	Done	Done	Done	Done	-	-

4.2 Watershed Works Phase:

4.2.1 Activities related to surface water resources in the project areas:

1	2	3	4	5	6			7											
Sl. No	Name of States	Name of Districts	Name of Projects	Type of structures	Pre Project			Proposed Project											
								Augmentation/ repair of existing structures				Construction of new structures				Total target			
					No	Area irrigated (ha)	Storage capacity	No	Area to be treated (ha)	Storage capacity	Estimated cost (in lakhs)	No	Area to be treated (ha)	Storage capacity (per unit)	Estimated cost (in lakhs)	No	Area to be treated (ha)	Storage capacity (m^3)	Estimated cost
1	Meghalaya	West Garo Hills	West Garo Hills – IWMP V	(i) Spring	-	-	-	-	-	-	-	2 nos.	-	5 m^3	1.20	2 nos.	-	15 m³	1.20
				(ii) Lake	-	-	-	-	-	-	-	-	-	-	-	-	--	-	-
				(v) Percolation Tank	-	-	-	-	-	-	-	-	-	-	-	-	-	-	-
				(vi) Channel	-	-	-	-	-	-	-	-	-	-	-	-	-	-	-
				(vii) Any others (please specify)															
			Total									**2**		**5 m³**	**1.20**	**2**		**15 m³**	**1.20**

8											9	10
Achievement due to project												
Augmentation/ repair of existing structures				Construction of new structures				Total achievement			Change in storage capacity (col 8-6)	Change in irrigated area (ha) Col. (8-6)
No	Area irrigated (ha)	Storage capacity	Expenditure incurred (in lakhs)	No	Area irrigated (ha)	Storage capacity	Expenditure incurred (in lakhs)	Area irrigated (ha)	Storage capacity	Estimated incurred		-
				3 nos.	5 Ha	3000 m^3	1.50	5 Ha	15 m^3	1.50		
				3 nos.	**5 Ha**	**3000 m^3**	**1.50**	**5 Ha**	**15 m^3**	**1.50**		

4.2.2 Activities related to recharging ground water resources in the project areas:

1	2	3	4	5	6		7								8								9
S. No.	Names of States	Names of Districts	Names of projects	Type of structures	Pre-project		Proposed target								Achievement due to project								Change in irrigated area (Col. 8-6) (ha)
					No.	Area irrigated (ha)	Augmentation/ repair of existing recharging structures			Construction of new recharging structures			Total target		Augmentation/ repair of existing recharging structures			Construction of new recharging structures			Total achievement		
							No.	Area to be irrigated (ha)	Estimated cost	No.	Area to be irrigated (ha)	Estimated cost	Area to be irrigated (ha)	Estimated cost	No.	Area irrigated (ha)	Expen di-ture incurred	No	Area irri-gated (ha)	Expen di-ture incurred	Area irri-gated (ha)	Expendi -ture incurred	
				(i)Open wells		Nil		Nil			Nil		Nil			Nil			Nil		Nil		
				(ii)Bore wells																			
				(iii)Any others (Pl. specify)																			
				Total for the project																			

4.2.3 Activities executed by User Groups in the Project Areas.

	2	3						
Names of Districts	Names of Projects	Major activities of the UGs –Targets				No. of UGs involved	Estimated Cost	Amount of WDF to be collected (Rs.)
		Structure/ activity proposed						
		Sl. No.	Type	No.#	Treatment (ha)			
West Garo Hills	West Garo Hills – IWMP V							

4.2.4 Activities executed by User Groups in the Project Areas:

4									
Major activities of the UGs – Achievements									
Structure/ activity				No. of UGs involved	Expenditure incurred (Rs.)	No. of mandays			Amount of WDF collected (Rs.)
Sl. No.	Type	No.#	Treated Area (ha.)			SC	ST	F	

4.2.5 Activities related to livelihoods by Self Help Groups (SHGs) in the project areas:

1	2	3		
Names of the Districts	Names of projects	Major activities of the SHGs		
		Name of activity	No. of SHGs involved	Average annual income from activity per SHG

4.2.6 Activities related to livelihoods by Self Help Groups (SHGs) in the project areas:

4	5				6	7	8			9	10
No. of SHGs given training	Total assistance received by the SHG (Amount in Rs.)				Total annual Income generated (Rs.)	Total annual Savings (Rs.)	No. of SHGs Graded as			Total Amount of loan sanctioned by the bank(s)	No. of SHGs federated
	Loan from revolving fund	Training	Material	Others (pl. specify)			I	II	III		

4.2.7 Other activities of watershed works phase:

1	2	3		4		5		6		7		8		9		10		11		12		13
District	Names of projects	Ridge area treatment		Drainage line treatment		Nursery raising		Land development		Crop demonstrations		Pasture development		Veterinary services		Fishery development		Non-conventional energy		Any other (please specify)		Total cost incurred (Rs. In lakhs)
		(a)	(b)	(a)	(b)	(a)	(b)	(a)	(b)	(a)	(b)	(a)	(b)	(a)	(b)	(a)	(b)	(a)	(b)	(a)	(b)	
WGH	IWMPV	11.25 Ha	1.125	30 Ha	10.00	-	-	-	-	-	-	-	-	-	-	-	-	-	-	-	-	37.50

4.2.8 Details of engineering structures in watershed works:

1	2	3	4			5			6	7						8						
District	Project	Name of structures	Type of treatment			Type of land			Executing agency	Target						Achievement						
			(i) Ridge area (R)	(ii) Drainage line (D)	(iii) Land Dev. (L)	(i) Pri-vate	(ii) Com-munity	(iii) Others (pl. specify)	(i) UG (ii)SHG (iii) Others (pl. specify)	No. of units (No./ cum./ rmt)	Estimated cost (Rs. in lakh)				Expected month & year of completion (mm/yyyy)	No. of units (No./ cu.m./ rmt)	Expenditure incurred (Rs. in lakh)				Status of comple-tion	Actual month & year of completion (mm/yyyy)
											M	W	O	T			M	W	O	T		
		Dug out Pond		D		√			Indiv.	4		2		2	3 yrs	4		2		2	3 yrs	3 yrs
		Bench terracing	-	D	-	√	-	-	Indiv.			0.2		0.2	3 yrs			0.2		0.2	3 yrs	3 yrs
		Irri. Dam		D		√			UG	4	6	4		10	3 Yrs	4	6	4		10	3 Yrs	3 yrs
		W/H Farm Pond		D		√			Indiv.	4	6	4		10	3 yrs	4	6	4		10	3 yrs	3 yrs
		Prot. Wall		D		√			UG	4	1.2	0.8		2	3 yrs	4	1.2	0.8		2	3 yrs	3 yrs
		C.C. Channel		D		√			UG	2	0.6	0.4		1	3 yrs	2	0.6	0.4		1	3 yrs	3 yrs

Contd.

4.2.9 Details of engineering structures in watershed works.

9																	
Outcomes																	
Reduction in run off (cu.m)	Area treated# (ha)	Water level (m)		Production (quintal)		Income (Rs.)		Mandays generated					No. of beneficiaries				
		Pre-project	Post project	Pre-project	Post project	Pre-project	Post project	SC	ST	Others (Men)	Women	Total	SC	ST	Others	Women	Total
-	130.00	-	-	-	-	-	-	-	100%	6840	4560	11400	-	100 %	42	8	50

4.2.10 Details of activities connected with vegetative cover in watershed works:

1	2	3	4			5			6	7				8			
District	Project	Name of structure/ work	Type of treatment			Type of land			Executing agency	Target				Achievement			
			(i) Ridge area (R)	(ii) Drainage line (D)	(iii) Land dev. (L)	(i) Private	(ii) Community	(iii) Others (pl. specify)	(i) UG (ii)SHG (iii) Others (pl. specify)	Area (ha)	No. of plants	Estimated cost (Rs. in lakh)	Expected month & year of comple-tion (mm/ yyyy)	Area (ha)	No. of plants	Expendi-ture incurred (Rs. in lakh)	Actual month & year of comple-tion (mm/ yyyy)
		Afforestation					✓			10	3375	0.86	3 yrs				
		Horticulture				✓				10 ha		0.86	3 yrs	-	-	-	-

in case two or more activities are executed over same area, the figures in area treated should be accounted only once and should reflect only the actual watershed area treated.

4.2.11 Details of vegetative structures in watershed works: Phase – II (contd.):

9														
Outcomes														
Reduction in run off (cu.m)	Production (quintal)		Income (Rs.)		Mandays generated					No. of beneficiaries				
	Pre-project	Post project	Pre-project	Post project	SC	ST	Others	Women	Total	SC	ST	Others	Women	Total
-	-	-	-	-	-	100 %	207	137	344					
-	-	-	-	-	-									
-	-	-	-	-	-	100 %	207	137	344					

4.2.12 Details of allied / other activities:

1	2	3	4			5	6		7	
			Type of land			Executing agency	Target		Achievement	
		Name of activity@	(i) Private	(ii) Community	(iii) Others (landless)	(i) UG (ii)SHG (iii) Others (pl. specify)	Estimated cost (Rs. in lakh)	Expected month & year of completion (mm/yyyy)	Expendi-ture incurred (Rs. in lakh)	Actual month & year of completion (mm/yyyy)
		Carpentry.			5 units	SHG's /Individual	0.175	3 yrs.		
District	Project	Tailoring			4 units	Do	0.20	3 yrs.		

(Contd.)

* from column no. 2, no. of States; from column no. 3, no. of Districts; from column no. 4, total no. of Projects; from column no. 5, activity-wise totals, from column no. 6, type-wise totals, from coulmn no. 7, agency-wise totals, from column no. 8, total estimated cost, from column no. 9, total expenditure incurred, structure-wise no. of completed works, from column no. 10, item-wise totals, for the entire country may be indicated at the end of the table

@The activities given in this column are merely indicative and States are free to choose any other activity suited to the project area.

4.2.13 Details of allied / other activities:

8											
Outcomes											
Income (Rs.)		Mandays generated					No. of beneficiaries				
Pre-project	Post project	SC	S T	Others	Women	Total	SC	ST	Others	Women	Total

4.3 Consolidation and withdrawal phase

Details of activities in the CPRs in the project areas:

1	2	3	4	5	6				7						
					Target				Achievement						
Names of the Districts	Names of projects	Name(s) of the villages	CPR particulars	Activity proposed	Target area under the activity (ha)	Estimated expenditure (Rs.)	Expected no. of beneficia-ries	Estimated contri-bution to WDF (Rs.)	Area treated under the activity (ha)	Expenditure incurred (Rs.)	Actual no. of benefici-aries	No. of mandays			WDF collected (Rs.)
												SC	ST	F	
West Garo Hills		Wakrintongre Saringre		Maint. & Repair of CPR	-	0.875	-	0.875	-	-	-	-	-	-	-

CHAPTER V

PROJECT PHASING & BUDGETING

CHAPTER V

PROJECT PHASING & BUDGETING

ACTION PLAN OF ARIM MICRO WATRSHED (IWMP) UNDER TERRITORIAL DIVISION, TURA.

Name of District : West Garo Hills **No. of villages Covered : 2 nos.**

Name of C. & R. D. Block : Rongram **Project Area : 250.00 Ha.**

(Figures in lakh)

1	2	3	4	5	6	7	8	9	10	11	12	13	14
Sl. No.	Activities	I st Yr. (6%)		II nd Yr. (14%)		III rd Yr. (50%)		IV th Yr. (25%)		V th Yr. (5%)		Total 100%	
		Phy.	Fin.	Phy.	Fin.	Phy.	Fin.	Phy.	Fin.	Phy.	Fin.	Phy.	Fin.
I	**Management Cost :**												
A	**Administrative Cost : 10 %**	-	-	2%	0.75	5%	1.875	3%	1.125	-	-	10%	3.75
	i) Honorarium of 1 WDT Member @ Rs.4000/- per month	-	-	-	0.08	-	0.48	-	0.24	-	-	-	0.80
	ii)Honorarium of watershed Committee Chairman @ Rs. 250/- per month	-	-	-	0.03	-	0.03	-	0.03	-	-	-	0.09
	iii) Honorarium of WCM @ Rs.100/- per member per month	-	-	-	0.108	-	0.108	-	0.108	-		-	0.324
	iv) Honorarium of Chartered Accountant	-	-	-	0.08	-	0.10	-	0.10	-	-	-	0.28
	v) TA/DA of Field Asst. @ Rs.2500/- per month	-	-	-	0.15	-	0.30	-	0.15	-	-	-	0.60
	vi) Hiring Charges of Office Building @ Rs.500/- per month	-	-	-	0.06	-	0.06	-	0.06	-	-	-	0.18
	vii) Hiring Charges of Vehicles @ Rs.2500/- per month	-	-	-	0.15	-	0.30	-	0.30	-	-	-	0.75
	viii)Office expenses, POL, Stationeries,Printing of SHG books, pamphlets, tea & snacks, cost of camera etc.	-	-	-	0.092	-	0.497	-	0.137	-	-	-	0.726
	Total Of 'A'			2%	0.75	5%	1.875	3%	1.125			10%	3.75
	Preparatory Phase :												
B	**Entry Point Activities ; 4 %**	4%	1.50									4%	1.50
	i) Construction of Spring Chamber @ Rs. 60000/- per no.	2 nos.	1.20	-	-	-	-	-	-	-	-	2	1.20
	ii) Construction of Ringwell @ Rs.30000/- per no.	1 nos.	0.30	-	-	-	-	-	-	-	-	1	0.30
	Total of 'B'	4%	1.50									4%	1.50

...C.O...

1	2	3	4	5	6	7	8	9	10	11	12	13	14
C.	**Institution & Capacity Building ; 5 %**	1%	0.375	2%	0.75	1%	0.375	1%	0.375			5%	1.875
	i) Awareness Campaign	-	0.10	-	0.10	-	0.075	-	0.10	-	-	-	0.30
	ii) Exposure visits off-campus	-	-	-	0.25	-	0.15	-	0.175	-	-	-	0.475
	iii)Capacity Building of SHGs/UGs	-	0.10	-	0.20	-	0.10	-	0.10	-	-	-	0.70
	iv) Capacity Building of WC members	-	0.075	-	0.20	-	0.05	-	-	-	-	-	0.30
	v) Capacity Building of WDT/W Volunteer	-	0.10	-	-	-	-	-	-	-	-	-	0.10
	Total of 'C'	**1%**	**0.375**	**2%**	**0.75**	**1%**	**0.375**	**1%**	**0.375**			**5%**	**1.875**
D.	**Detail Project Report (DPR) - 1%**	**1%**	**0.375**									**1%**	**0.375**
	i) Cost of Resources Inventories works	-	0.125	-	-	-	-	-	-	-	-	-	0.125
	ii) Cost of PRA	-	0.05	-	-	-	-	-	-	-	-	-	0.05
	iii) Cost of Land use survey	-	0.125	-	-	-	-	-	-	-	-	-	0.125
	iv) Cost of formulating	-	0.075	-	-	-	-	-	-	-	-	-	0.075
	Total of 'D'	**1%**	**0.375**									**1%**	**0.375**
E.	**i) Monitoring - 1%**	-	-	-	**0.075**	-	**0.1875**	-	**0.1125**	-	-	1%	0.375
				0.2%	**0.075**	**0.5%**	**0.1875**	**0.3%**	**0.1125**			**1%**	**0.375**
F.	**ii) Evaluation - 1%**	-	-	-	0.1125	-	0.1875	-	-	-	-	1%	0.375
	Total of 'E'			**0.3%**	**0.1125**	**0.5%**	**0.1875**	**0.2%**	**0.075**			**1%**	**0.375**
	Total of I (A to F)	**6%**	**2.25**	**4.5%**	**1.6875**	**7%**	**2.625**	**4.5%**	**1.6875**			**22%**	**8.25**
II	**Watershed Works Phase : 50 %**			**7.50%**	**2.8125**	**35%**	**13.125**	**7.50%**	**2.8125**			**50%**	**18.75**
A.	**Arable Land Treatment :**												
	iii) Terracing - @ Rs.20000/- ha.	-	-	3	0.60	-	-	1	0.20	-	-	3	0.80
	Total of 'A'				**0.60**				**0.20**				**0.80**
B.	**Non-Arable Land Treatment :**												
	i) Afforestation - Prelim. @ Rs.1300/- per ha.	-	-	10	0.13	-	-	-	-				0.13
	1st year Planting @ Rs.4600/- per Ha.	-	-	-	0.46	-		-	-	-	-		0.46
	2nd year Planting @ Rs. 2700/- per Ha.	-	-	-	-	-	0.27	-	-	-	-		0.27
	ii)Rubber pltn. - Pelim. @ Rs.1300/-per ha.	-	-	10	0.13	-	-	-	-	-	-		0.13
	1st year Planting @ Rs.4600/- per Ha.	-	-		0.46	-	-	-	-	-	-		0.46
	2 nd year Planting @ Rs. 2700/- per ha.	-	-	-	-	-	0.27	-	-	-	-		0.27
					1.18		**0.54**						**1.72**

C.	***Drainage Line Treatment :***												
	i) C.C. Irrigation Dam	-	-	-	-	2	5.00	1	2.50	-	-		7.50
	ii) W/H Farm Pond	-	-	-	-	2	5.00	-	-	-	-		5.00
	iii) Dug out-cum-Fishery Pond	-	-	1	0.992	1	0.992	-	-	-	-		1.98
	iv) Protection Wall	-	-	-	-	3	1.50	-	-	-	-		1.50
	v) Earthen Irrigation Channel @ Rs.50/-per R/m	-	-	-	-	265.00	0.1325	225.00	0.1125	-	-		0.25
	Total of 'C'				**0.9525**		**12.625**		**2.6125**				**16.23**
	Total of II (A to C)			**7.5%**	**2.8125**	**35%**	**13.125**	**7.5%**	**2.8125**			**50%**	**18.75**
III	***Livelihood Activities for Assetless Person - 10%***			1%	0.375	3%	1.125	6%	2.25			10%	3.75
	i) Kitchen Garden @ Rs.2500/- per unit	-	-	3	0.075	5	0.125	2	0.05	-	-		0.25
	ii) Pisciculture @ Rs. 10000/- per unit	-	-	3	0.30	1	0.10	3	0.30	-	-		0.70
	iii)Carpentry @ Rs. 5000/- per unit	-	-	-	-	2	0.10	6	0.30				0.40
	iv) Tailoring @ Rs. 8000/- per unit	-	-	-	-	5	0.40	10	0.80				1.20
	v) Poultry/Piggery @ 8000/- per unit	-	-	-	-	5	0.40	10	0.80				1.20
	Total of ***III***			1%	0.375	3%	1.125	6%	2.25			10%	3.75
IV	***Production System & Micro Enterprises - 13%***			1%	0.375	5%	1.875	7%	2.625			13%	4.875
	i) Grocery @ Rs. 30000/- per unit	-	-		0.30		0.90		0.90				2.10
	ii)Weaving @ Rs. 30000/- per unit	-	-		-		0.90		1.20				2.10
	iii)Basket Making @ Rs.2500/- per unit	-	-		0.075		0.075		0.025				0.175
	iv) Rice Mill @ Rs. 50000/- per unit	-	-		-				0.50				0.50
	Total of IV			**1%**	**0.375**	**5%**	**1.875**	**7%**	**2.625**			**13%**	**4.875**

V	***Consolidation & withdrawal Phase - 5 %***									***5%***	***1.875***	***5%***	***1.875***
	i) Repairing & maintenance of CPR's	-	-	-	-	-	-	-	-	-	*0.875*	-	*0.875*
	ii) Improving the sustainability of various intervention	-	-	-	-	-	-	-	-	-	*0.50*	-	*0.50*
	iii)Documentation of successful experience and preparation of Completion Report.	-	-	-	-	-	-	-	-	-	*0.50*	-	*0.50*
	Total of V									***5%***	***1.875***	***15%***	***1.875***
	Grand Total (I + I I + III +I V +V)	***6%***	***2.25***	***14%***	***13.50***	***50%***	***12.375***	***25%***	***7.50***	***5%***	***1.875***	***100%***	***37.50***

Deputy Commissioner,
West Garo Hills, Tura
Meghalaya.

Divisional Officer,
Soil & Water Conservation (T) Division.
West Garo Hills.

VILLAGEWISE ACTION PLAN OF ARIM MICRO WATERSHED UNDER IWMP - V
TERRITORIAL DIVISION : TURA .

Name of District : West Garo Hills
Name of C.& R.D. Block : Rongram

No. of village : 2 nos.
Project Area : 250.00 Ha.

Sl. No.	Activities	Wakritonggre		Saringre		Total	
		Phy.	Fin.	Phy.	Fin.	Phy.	Fin.
1	2	3	4	5	6	7	8
I	***Watershed works Phase :***						
A.	**Arable Land Treatment :**						
	i) Rubber Plantation @ Rs. 8600/- per Ha.	5	0.43	5	0.43	10	0.86
	ii) Terracing @ Rs.20000/- per Ha.	2	0.40	1	0.20	3	0.80
B.	**Non-arable Land Treatment :**						
	i) Afforestation @ Rs. 10100/- per Ha.	5	0.505	5	0.505	10	1.001
C.	**Drainage Line Treatment :**						
	i) Irrigation Dam @ Rs. 250000/- per no.	2	5.00	1	2.50	*3*	*7.50*
	ii) W/H Farm Pond @ Rs. 250000/- per no.	1	2.50	1	2.50	*2*	*5.00*
	iii) Dug out Pond @ Rs. 50000/- per no.	1	0.95	1	0.95	*2*	*1.90*
	iv) Protection Wall @ Rs. 50000/- per no.	2	1.00	1	0.50	*5*	*1.50*
	v) Earthen Irrigation Channel @ 50/- per R/ m	1	0.13	1	0.11	*2*	*0.25*
III	**Livelihood Activities for Assetless Household :**						
	i)Kitchen Garden @ 2500/-	5	0.125	5	0.125	10	0.25
	ii)Pisciculture @ 10000/-	4	0.4	3	0.3	7	0.7
	iii)Carpentry @ 5000/-	4	0.2	4	0.2	*8*	*0.40*
	Tailoring @ 8000/-	8	0.64	7	0.56	*15*	*1.2*
	Piggery/Poultry @ 8000/-	7	0.56	8	0.64	15	1.2
IV	**Production System and Micro Enterprises :**						
	i) Grocery @ 30000/-	4	1.20	3	0.90	*7*	*2.10*
	ii) Weaving @ 30000/-	3	0.90	4	1.2	*7*	*2.10*
	iii)Basket Making @ 2500/-	3	0.075	4	0.1	7	0.175
	iv)Rice Mill @ 50000/-	1	0.5			1	0.5

Details of the types of areas covered under the IWMP Programme:

1	2	3	4	5	6		7	8	9	10				11				
SL No	Name of State	Name of Districts	Names of Projects	Year of sanction	Project duration (dd/mm/yyyy)		Area of the projects	Project cost (Rs. In lakh)	Names of Micro watersheds & Code nos. (as per DoLR's unique codification)	Area (ha) of the projects				Area details (ha) (falling within the projects)				
					From	To				Cultivated rainfed area	Cultivated irrigated area	Uncultivated wasteland		Pvt. Agri. Land	Forest land	Community land	Others (pl. specify)	Total area (ha)
												a) Temporary fallow	b) Per manent					
1	Meghalaya	West Garo Hills	West Garo Hills – IWMP V	2011-12	2011-12	2015-16	250.0 Ha	37.50 Lakh	**Arim (Lower** Reaches) –	42.37 Ha	Nil	30.37	-	22.37	10.85	21.49	122.55	250.0 Ha

Fund provision for the IWMP projects from all sources:

1	2	3		4										5
District	Name of Projects	IWMP Fund		Funds from other sources in addition to IWMP funds										Total
				Convergence funds		PPP		Community		Institutional finance		Others (Pl. specify)		
		Central Share	State Share	Name of Scheme	Amount (Lakhs)	Name of private sector	Financial contri-bution	Name	Financial contri-bution	Name	Financial contri-bution	Name	Financial contri-bution	
West Garo Hills	West Garo Hills – IWMP V	33.75 lakh	3.75 lakh	MNREGS	11.50	Nil	Nil	Nil	Nil	Nil	Nil	Nil	Nil	49.00

Details of Project Fund Accounts of Distt. Agency and Watershed Committees:

1	2	3	4	5				6				
Sl. No.	Names of States	Name of Districts	Names of Projects	Distt. Agency's Project Account details				Watershed Committee (WC) account details:				
				Name of the Bank and Branch where project account has been opened	Account Number (to be obtained confiden-tially)	Account type (Savings/ Current/ Others)	Name & Designation of authorized persons who operate the account.	Name of Watershed Committee	Name of the Bank and Branch where project account has been opened	Account number (to be obtained confiden-tially	Account type (Savings/ current others)	Name & Designation of authorized persons who operate the account.
1	Megha laya	West Garo Hills	West Garo Hills – IWMP V	State Bank of India, Tura		Saving	Shri S.Ch. Sangma, DS&WCO	Arim Watershed Committee	Axis Bank, Tura	91101000628913 7	Saving	Chairman W.C, Secretary W.C.

Details of Convergence of IWMP with other Schemes:

	1	2	3	4	5	6	7
Sl. No.	District	Names of projects	Names of Departments with Schemes converging with IWMP	Fund made available to IWMP due to convergence (Rs. in lakh)	Name of activity/task/structure undertaken with converged funds (a) Structures (b) livelihoods (c) Any other (pl. specify)#	Reference no. of activity/ task/ structure in DPR@	Level at which decision for convergence was taken$
1	West Garo Hills	West Garo Hills – IWMP V	* Community Rural Development Department NREGS	11.50	C.C. Irrigation Dam Rubber Plantation	-	Block Level & District Level
2			* PHE Department TSC	n.a		-	

Note:

(i) Gondenggre Wages – 4.60; Material – 6.90; C.C. Irrigation Dam Rubber Plantation.

Public-Private Partnership in the IWMP projects: NIL

1	2	3	4			5		6	7	8	9
District	Name of project	Name of Private Sector Partner Agency	Type of agreement signed			Financial contribution		Partnership Interventions	Expected Outcomes	Actual Outcomes	Comments
			a)MoU	b)Contract	c) Any other (pl. specify)	IWMP	Private sector				

***** from Column no. 2, total no. of States implementing the programme, from Column no. 3, total no. of Districts; from Column no. 4, total no. of projects under PPP; from Column no. 5, total no. of private companies/ agencies, from column no. 7, total amounts may be mentioned at the end of the table for the entire country.

CHAPTER VI
CAPACITY BUILDING

CHAPTER VI
CAPACITY BUILDING

Capacity Building is a process to systematically upgrade the skill of individuals or groups for achieving a specific target. Capacity building in the project has been planned for all the stake holders involved i.e. State Level, District Level, Project Level and Village Level. The relevant details pertaining to Capacity Building has been shown below.

Table 6.1: List of approved Training Institutes for Capacity Building:

1	2	3	4	5	6	7	8	9				
								Performance				
S. No	State	Name of the Training Institute	Full Address with contact no., website & e-mail	Name & Designation of the Head of Institute	Type of Institute#	Area(s) of specialization$	Accre-ditation details	Refer-ence Year	No. of trainings assigned	No. of trainees to be trained	No. of trainings conducted	No. of trainees trained
1	Meghalaya	NIRD (NER)	Guwahati	Director	Central Govt.	Remote Sensing, Rural Devt.	NA	-				
2		SIRD	Nongsder	Director	State Govt.	Capacity Building	NA	-				
3		RRTC	Umran	Director	Don-Bosco	Agri-Horti, Animal Husbandry, Entrepreneurship	NA					
4		ICAR	Umiam	Director	Central Govt.	Do	NA					
5		VTC	Kyrdem Kulai	Director	State Govt.	Animal Husbandry	NA					
6		Fruit Garden	Shillong	Director	State Govt.	Agri-Horti, Fruit Processing	NA					

- From Column no. 2, total no. of States implementing the programme, from Column no. 3, no. of training institutes, from column No. 9, total no. of category-wise trainings and trainees may be given at the end of the table for the entire country
- # Central govt. Dept./ State govt. Dept./ Autonomous Body/ Research Institutes/ Universities/ Others (pl. specify)

$ Capacity Building/ Agriculture/ Horticulture/ Animal Husbandry/ Pisciculture/ Remote Sensing/ Water conservation/ Ground water/ Forestry/ livelihoods/ entrepreneurship development/ others (pl. specify)

[@] The training institutes must fulfill the conditions mentioned in the operations guidelines.

(i) Technical experts in fields required by IWMP
(ii) Past experiences
(iii) Annual Turnover
(iv) Receives funds either from the Central or State Government
(v) Publications
(vi) Not blacklisted by any Govt. organizations
(vii) Audited accounts
(viii) Organizational structure

Table 6.2: Capacity Building activities for the year 201 – 12 as on 31/03/2011 (dd/mm/yyyy)*

1	2	3	4	5	6		7	
Project Stakeholders	**Total no. of persons**	**No. of persons trained so far**	**No. of persons to be trained during current financial year**	**No. of persons trained during current financial year**	**Sources of funding for training**		**Funds utilized (Lakhs)**	
					a) DoLR	**b) Any other (Pl. specify)**	**a) DoLR**	**b) Any other (Pl. specify)**
SLNA	150 Nos.	-	150 Nos.	-	(5%) 1.875	-	(1%) 0.375	-
DRDA/ZP cell	25 Nos.	-	25 Nos.	-				
PIAs	5 Nos.	-	5 Nos.	-				
WDTs	10 Nos.	-	10 Nos.	-				
UGs	10 Nos.	-	10 Nos.	-				
SHGs	20 Nos.	-	20 Nos.	-				
WCs	10 Nos.	-	10 Nos.	-				
GPs	15 Nos.	-	15 Nos.	-				
Community	150 Nos.	-	150 Nos.	-				
Others Pl. specify)								

Table 6.3: Information, Education & Communication (IEC) activities for the year 2011-12 as on 31/03/11 (dd/mm/yyy)*

	1	2	3	4	5
	Activity	**Executing agency**	**Estimated expenditure (Rs.)**	**Expenditure incurred (Rs.)**	**Outcome (may quantity, wherever possible)**
1.	Awareness	S&WC (T) Division	0.30	0.30	
2.	PRA Exercises	S&WC (T) Division	0.05	0.05	
3.	Exposure Visits	S&WC (T) Division	0.475	0.475	
4.	Capacity Building	S&WC (T) Division	1.10	1.10	

CHAPTER VII

EXPECTED OUTCOME

CHAPTER VII
EXPECTED OUTCOME

Table 7.1 Employment related outcomes:

Sl No	Name of Village	1										2				
		Wage employment										Self employment				
		No. of mandays					No. of beneficiaries					No. of beneficiaries				
		SC	ST	Others	Women	Total	SC	ST	Others	Women	Total	SC	ST	Others	Women	Total
1.	Wakrintonggre Saringre		100 %	4500	2750	7250		100 %	30	20	50					

Table 7.2 Migration Details:

1	2	3	4	5	6	7	8	9	10	
Names of the Districts	Names of Projects	Name of village	No. of persons migrating	No. of days per year of migration	Major reason(s) for migrating	Distance of destination of migration from the village (km)	Occupation during migration	Income from such occupation (Rs. in lakh)	For reduced migration identify major activities of IWMP responsible	
									(a) Structures	(b) Livelihoods
				N	I	L				

* From column no. 2, total number of States; from column no. 3, total no. of Districts; from column no. 4, total no. of projects; from column no. 5, total no. of villages; from column no. 6, total no. of persons migrating; from column no. 7, average no. of days for annual migration; from column no. 9, average distance of migration from the village and form column no. 11, average income from occupation during migration, for the entire country may be given at the end of the Table.

Table 7.3 Economic benefits accrued to women:

1		2		3		4
Wages		Training		Livelihoods		Total (Rs. in lakh)
Woman days	Amount (Rs. in lakh)	No. of women participants	Amount (Rs. in lakh)	No. of women beneficiaries	Value of assistance provided (Rs. in lakh)	

* from Column no. 2, total no. of States implementing the programme, from Column no. 3 to 6, category-wise totals, may be mentioned at the end of the table for the entire country.

Table 7.4 Details of rights conferred in the CPRs of the project areas:

1	2	3	4	5	6	7				8
Names of the Districts	**Names of the projects**	**Names of the villages**	**Particular of CPR**	**Nature of right**	**Period of right**	**Beneficiary details (no. of families)**				**User Charges (Rs.)**
						SC	**St**	**Others**	**Total**	
West Garo Hills District	WGH-IWMP-V									

* From column no. 2, no. of States; from column no. 3, no. of Districts; from column no. 4, no. of projects; from column no. 5, no. of villages; from column nos. 9 & 10, particular-wise totals for the entire country may be given at the end of the table.
@ In column no. 6, the categories given in table no. M(SP) 10, column 5 may be filled as required.

In column no. 7, only the letter assigned to each type, as given below, needs to be typed.

F	for right to	fishing [culture, harvest and sale]
Fw	for right to	collect firewood for domestic purposes
G	for right to	grazing for cattle and
MFP	for right to	collect and sell minor forest produces
P	for right to	passage across the CPR
Rd	for right to	construct a road for access to individual property
S/M	for right to	collect and sell sand and minerals
T	for right to	collect timber for construction of house
Wd	for right to	collect/ use water for drinking
Wi	for right to	use water for irrigation
O	for any right other than indicated above (please specify	

Table 7.5 Water related outcomes:

Table 7.5.1 Details of average ground water table depth in the project areas of the Country: State-wise * (in metres)

1	2	3	4	5	6	7	8
Names of Districts	**Names of Projects**	**Sources**	**Pre-Project level**	**Mid-term project level**	**Post-Project level**	**Increase/decrease (Col. 8 – Col. 6)**	**Remarks**
West Garo Hills District	WGH-IWMP V	Open wells	-	-	-	-	-
		Bore wells	-	-	-	-	-
		Others (specify) Springs	very poor poor	poor	Good	Increased	-

* From column no. 2, total number of States; from column no. 3, total no. of Districts; from column no. 4, total no. of projects, from column nos. 6 to 9, the average measurements, category-wise, for the entire country may be given at the end of the table. The data must be based on the average of the Ground Water Table collected by PIA with the help of concerned technical expert in the same sample of 10 % of selected wells and bore wells in the villages in the watershed project area during pre-project, mid-term and post-project periods.

Table 7.5.2 Status of Drinking water:

1	2	3			4			5
District	**Name of the project**	**Availability of drinking water (no. of monyhs in a year)**			**Quality of drinking water**			**Comments**
		Pre-project	**Post-project**	**Change in availability**	**Pre-project**	**Post-project**	**Change in quality**	
West Garo Hills District	WGH-IWMP V	Insufficient	Sufficient	10 – 12 months	Moderate	Improved	Improved	-

* From column no. 2, total number of States implementing the programme, from column no. 3, total no. of Districts; from column no. 4, category-wise no. of projects, from column no. 5, average no. of months may be given at the end of the table for the entire country.

Table 7.5.3 Water Use efficiency:

1	2	3	4			
			Water savings in cu.m.			
District	Name of the project	Name of major crop	through water saving devices$	through water conserving agronomic practices#	Any other (pl specify)	Total
West Garo Hills District	WGH-IWMP V	Black Pepper	PVC pipes	FYM, mulching	-	-

* From column no. 2, total number of States implementing the programme, from column no. 3, total no. of Districts; from column no. 4, total no. of projects, from column no. 6, practice-wise totals may be mentioned at the end of the table for the entire country.
$ Sprinkler, Drip, PVC pipe, etc.
# Vermi-compost, organic manuring, Mulching, Check basin, Alternate furrow, Ridges & furrow & other scientific practices.

Table 7.6: Vegetation/ crop related outcomes:

Table 7.6.1 Details of Karif crop area and yield in the project areas:

1	2	3	4						5						6					
Names of the Districts	**Name of Projects**	**Name of crops**	**Pre-project**						**Mid-term**						**Post-project**					
			Area (ha)		**Average Yield (Qtl) per ha.**		**Total Production (Qtl)**		**Area (ha)**		**Average Yield per ha (Qtl)**		**Total Production (Qtl)**		**Area (ha)**		**Average Yield per ha (Qtl)**		**Total Production (Qtl)**	
			Irri	**Rf.**	**Irri**	**Rf.**	**Irri**	**Rf.**	**Irri**	**Rf.**	**Irri**	**Rf.**	**Irri**	**Rf.**	**Irri**	**Rf.**	**Irri**	**Rf.**	**Irri**	**Rf.**
		Millet	-	25	-	10	-		50	-	12	-	600	-	75	-	24	-	1800	-
		Yam	-	25	-	25	-		25	-	25	-	625	-	35	-	50	-	1750	-
		Ginger	-	40	-	20	-		25	-	22	-	550	-	65	-	24	-	1560	-
		Tapioca	-	20	-	20	-		25	-	25	-	625	-	35	-	50	-	1750	-
		Betel nut	-	30	-	25	-		25	-	27	-	675	-	50	-	54	-	2700	-
		Betel leaf	-	20	-	15	-		25	-	23	-	575	-	40	-	46	-	1840	-

* From column no. 2, total number of States; from column no. 3, total no. of Districts; from column no. 4, total no. of projects, from column no. 5, total no. of crops; from column no. 6 to 8, the totals for the area, average yield per ha and total production, category-wise, for the entire country may be given at the end of the Table.
Irri. – Irrigated Rf – Rainfed

Table 7.6.2 Details of Rabi crop area and yield in the project areas:

1	2	3	4	5	6						7						8					
					Pre-project						Mid-term						Post-project					
Sl No.	Names of States	Names of the Districts	Name of Projects	Name of crops	Area (ha)		Average Yield (Qtl) per ha.		Total Production (Qtl)		Area (ha)		Average Yield per ha (Qtl)		Total Production (Qtl)		Area (ha)		Average Yield per ha (Qtl)		Total Production (Qtl)	
					Irri	Rf.	Irri	Rf.	Irri	Rf.	Irri	Rf.	Irri	Rf.	Irri	Rf.	Irri	Rf.	Irri	Rf.	Irri	Rf.
	Meghalaya	West Garo Hills District	WGH-IWMP V	Black Pepper	-	-	-	-	-	-	20	-	25	-	500	-	50	-	30	-	1500	-
				Vegetables	-	-	-	-	-	-	10	-	35	-	350	-	20	-	40	-	800	-
			Total for the District																			

* From column no. 2, total number of States; from column no. 3, total no. of Districts; from column no. 4, total no. of projects, from column no. 5, total no. of crops; from column no. 6 to 8, the totals for the area, average yield per ha and total production, category-wise, for the entire country may be given at the end of the Table.

Irri. – Irrigated Rf – Rainfed

Table 7.6.3 Details of Zaid crop area and yield in the project areas of the Country: State-wise:

1	2	3	4	5	6						7						8					
					Pre-project						Mid-term						Post-project					
Sl No.	Names of States	Names of the Districts	Name of Projects	Name of crops	Area (ha)		Average Yield (Qtl) per ha.		Total Production (Qtl)		Area (ha)		Average Yield per ha (Qtl)		Total Production (Qtl)		Area (ha)		Average Yield per ha (Qtl)		Total Production (Qtl)	
					Irri	Rf.	Irri	Rf.	Irri	Rf.	Irri	Rf.	Irri	Rf.	Irri	Rf.	Irri	Rf.	Irri	Rf.	Irri	Rf.
	Meghalaya	West Garo Hills District	WGH-IWMPV	Black Pepper	-	-	-	-	-	-	20 Ha	-	25	-	500	-	40	-	30	-	1200	-
			Total for the District																			

* From column no. 2, total number of States; from column no. 3, total no. of Districts; from column no. 4, total no. of projects, from column no. 5, total no. of crops; from column no. 6 to 8, the totals for the area, average yield per ha and total production, category-wise, for the entire country may be given at the end of the Table.

Irri. – Irrigated Rf – Rainfed

Table 7.6.4 Increase/ Decrease in area under fodder:

1	2	3	4			5		
			Existing area under fodder (ha)			Achievement (ha)		
District	**Name of project**	**Duration of Project**	**Source/Name of report**	**Year of reference**	**Area already under fodder**	**Area under fodder proposed to be covered through IWMP**	**Area under fodder actually covered through IWMP**	**Change in area under fodder**
West Garo Hills District	WGH-IWMP V							

* From column no. 2, total number of States implementing the programme, from column no. 3, total no. of Districts; from column no. 4, total no. of projects, from column nos. 6 & 7, total area in ha may be given at the end of the table for the entire country.

Table 7.6.5 Increase/ Decrease in Forest/vegetation cover:

1	2	3	4			5		
			Existing area tree cover (ha)			Achievement (ha)		
District	**Name of project**	**Duration of Project**	**Source/Name of report**	**Year of reference**	**Area already under forest/vegetative cover**	**Forest/vegetative cover area proposed to be covered under IWMP**	**Forest/vegetative cover area actually covered under IWMP**	**Change in forest/vegetative cover area**
West Garo Hills District	WGH-IWMP V	5 yrs	PRA	2010	245.90 Ha	10.00 Ha	10.00 Ha	10.00 Ha

* From column no. 2, total number of States implementing the programme, from column no. 3, total no. of Districts; from column no. 4, total no. of projects, from column nos. 6 & 7, total area in ha may be given at the end of the table for the entire country.

Table 7.6.6 Increase/ Decrease in area under horticulture:

1	2	3	4			5		
			Existing area under horticulture (ha)			Achievement (ha)		
District	**Name of project**	**Duration of Project**	**Source/Name of report**	**Year of reference**	**Area already under horticulture**	**Area under horticulture proposed to be covered through IWMP**	**Area under horticulture actually covered through IWMP**	**Change in area under horticulture**
West Garo Hills District	WGH-IWMP V	5 yrs	PRA/LULC	2010	85.14 Ha.	10.00 Ha.	10.00 Ha.	10.00 Ha.

* From column no. 2, total number of States implementing the programme, from column no. 3, total no. of Districts; from column no. 4, total no. of projects, from column nos. 6 & 7, total area in ha may be given at the end of the table for the entire country.

Table 7.6.7 Increase/ Decrease in area under fuel-wood:

1	2	3	4			5		
			Existing area under fodder (ha)			Achievement (ha)		
District	**Name of project**	**Duration of Project**	**Source/Name of report**	**Year of reference**	**Area already under fuel-wood**	**Area under fuel-wood proposed to be covered under IWMP**	**Area under fuel-wood actually covered under IWMP**	**Change in area under fuel-wood**
West Garo Hills District	WGH-IWMP V	5 yrs						

* From column no. 2, total number of States implementing the programme, from column no. 3, total no. of Districts; from column no. 4, total no. of projects, from column nos. 6 & 7, total area in ha may be given at the end of the table for the entire country.

Table 7.7 Livelihood related outcomes:

Table 7.7.1 Details of livestock in the project areas (for fluids please mention in litres, for solids please mention in kgs. and income in Rs.):

1	2	3	4			5			6			7
Names of the Districts	**Name of Projects**	**Type of Animal**	**Pre-project**			**Mid-term**			**Post-project**			**Remarks**
			No.	**Yield**	**Income**	**No.**	**Yield**	**Income**	**No.**	**Yield**	**Income**	
West Garo Hills District	WGH-IWMP V											
		Piggery	22	-	3.3	44	-	8.75	88	-	20.00	
		Poultry	275	-	3.85	350	-	5.25	700	-	10.00	
	Total for all projects		297	-	7.51	394	-	14.00	788	-	30.00	
Total for all Districts												

* From column no. 2, total number of States; from column no. 3, total no. of Districts; from column no. 4, total no. of projects, from column nos. 5 to 8, the total nos. of animals and the average yield and incomes, category-wise, for the entire country may be given at the end of the Table.

Table 7.7.2 Details of other livelihoods created for landless people:

1	2	3	4	5				6	7					8				
District	Project	Name of activity	Fund required for the activity (Rs.)	Sources of funding (Rs.)				Actual Expenditure incurred on activity (Rs.)	No. of beneficiaries trained					No. of beneficiaries taking up activity				
				Project Fund	Benefi-ciary	Others (pl. specify)	Total		SC	ST	Others	Women	Total	SC	ST	Others	Women	Total

(Contd.)

* From column no. 2, total number of States; from column no. 3, total no. of Districts; from column no. 4, total no. of projects, from column no. 5, total no. of activities; from column no. 6, total funds required for the activity, from column no. 7 to 12, category-wise totals, from column no. 13, category-wise totals, for the entire country may be given at the end of the Table.

sTable 7.7.3 Details of other livelihoods created for landless people:

9		10	11				12
No. of persons employed indirectly in the activity		Annual increase in income due to activity (Rs.)	Impact of livelihoods programme				Any other information (pl. Specify)
			Migration (No. of beneficiaries)		Development of backward-forward linkages		
Total	Grand Total (8+9)		Pre-project	Post-project	Pre-project	Post-project	

Table 7.7.4 Details of other livelihoods created for farmers:

1	2	3	4	5				6	7				8			
District	Project	Name of activity	Fund required for the activity (Rs.) in lakhs	Sources of funding (Rs.) in Lakhs				Actual Expenditure incurred on activity (Rs.)	No. of farmers trained				No. of farmers taking up activity			
				Project Fund	Benefi -ciary	Others (pl. specify)	Total		SF	MF	LF	Total	SF	MF	LF	Total
West Garo Hills District	WGH-IWMP V															

* From column no. 2, total number of States; from column no. 3, total no. of Districts; from column no. 4, total no. of projects, from column no. 5, total no. of activities; from column no. 6, total funds required for the activity, from column no. 7 to 12, category-wise totals, from column no. 13, category-wise totals, for the entire country may be given at the end of the Table.

Table 7.7.5 Details of other livelihoods created for farmers * (contd.)

9		10	11				12
No. of persons employed indirectly in the activity		Annual increase in income due to activity (Rs.)	Impact of livelihoods programme				Any other information (pl. Specify)
			Migration (No. of beneficiaries)		Development of backward-forward linkages		
Total	Grand Total (8+9)		Pre-project	Post-project	Pre-project	Post-project	

Table 7.8 Marketing related outcomes:

Backward-Forward linkages *

1	2	3	4	5	6
District	**Project**	**Type of Marketing Facility**	**Pre-project (no.)**	**During the project (no.)**	**Post-project (no.)**
West Garo Hills District	WGH-IWMP V	**(A) Backward linkages**			
		(i) Seed certification			
		(ii) Seed supply system			
		(iii) Fertilizer supply system			
		(iv) Pesticide supply system			
		(v) Credit institutions			
		(vi) Water supply			
		(vii) Extension services			
		(viii) Nurseries			
		(ix) Tools/machinery suppliers			
		(x) Price Support system			
		(xi) Labour			
		(xii) Any other (please specify)			
		(A) Forward linkages			
		(i) Harvesting/threshing machinery			
		(ii) Storage (including cold storage)			
		(iii) Road network			
		(iv) Transport facilities			
		(v) Markets / Mandis			
		(vi) Agro and other Industries			
		(vii) Milk and other collection centres			
		(viii) Labour			
		(ix) Any other (please specify)			

* from column no. 2, total no. of States implementing the programme, from column no. 3, total no. of Districts; from column no. 4, total no. of projects; from column no. 6, 7 & 8, category-wise totals may be given at the end of the table for the entire country.

Table 7.9 Abstract of outcomes:

1	2	3	4	5	6	7
Sl. No.	**State**	**Item**	**Unit**	**Pre-project Status**	**Post-project Status**	**Remarks**
		Status of water table		Very poor - poor	Good	
		Ground water structures repaired/ rejuvenated		-		
		Quality of drinking water		Moderate potable	Improved	
		Availability of drinking water		Insufficient	Sufficient	
		Increase in irrigation potential		-	4 nos.	
		Change in cropping/ land use pattern		-	-	
		Area under agricultural crop				
		i Area under single crop		-	-	
		ii Area under double crop		40 ha	60 ha	
		iii Area under multiple crop		50 ha	80 ha	
		Net increase in crop production area				
		Increase in area under vegetation		-	150 ha	
		Increase in area under horticulture		-	70 ha	
		Increase in area under fuel & fodder				
		Increase in milk production		-	-	
		No. of SHGs			4 nos.	
		Increase in no. of livelihoods		-	12 nos.	
		Increase in income		-	45,000	
		Migration		-	-	
		No. of school going children		40 nos.	125 nos.	
		SHG Federations formed		-	-	
		Credit linkage with banks		-	15 nos.	
		Resource use agreements		-	7 nos.	
		WDF collection & management		-	1 no.	
		Summary of lessons learnt	May be attached as a separate file			

Table 7.10 Cost effectiveness of structures/ activities*

1	2	3	4	5	6	7	8	9	10
District	**Name of project**	**Name of WC**	**Name of structure/ activity**	**Estimated cost (Rs.)**	**Expected quantifiable benefits (Rs.)**	**Expenditure incurred (Rs.)**	**Actual quantifiable benefit (Rs.)**	**Benefit: Cost ratio#**	**IRR**
West Garo Hills District	WGH-IWMP V	Arim	As per Treatment Plan	27.375 lakhs	36.586	-	-	1:1.33	-

***** from column no. 2, total no. of States implementing the programme, from column no. 3, total no. of Districts; from Column no. 4, no. of projects, from column no. 5, no. of WCs, from column no. 6, no. of structures/ activities, from column no. 7 to 10, category-wise# totals, may be mentioned at the end of the table for the entire country.

B:C ratio more than 1 – cost effective
less than 1 – Not cost effective

ANNEXURE I

MAPS

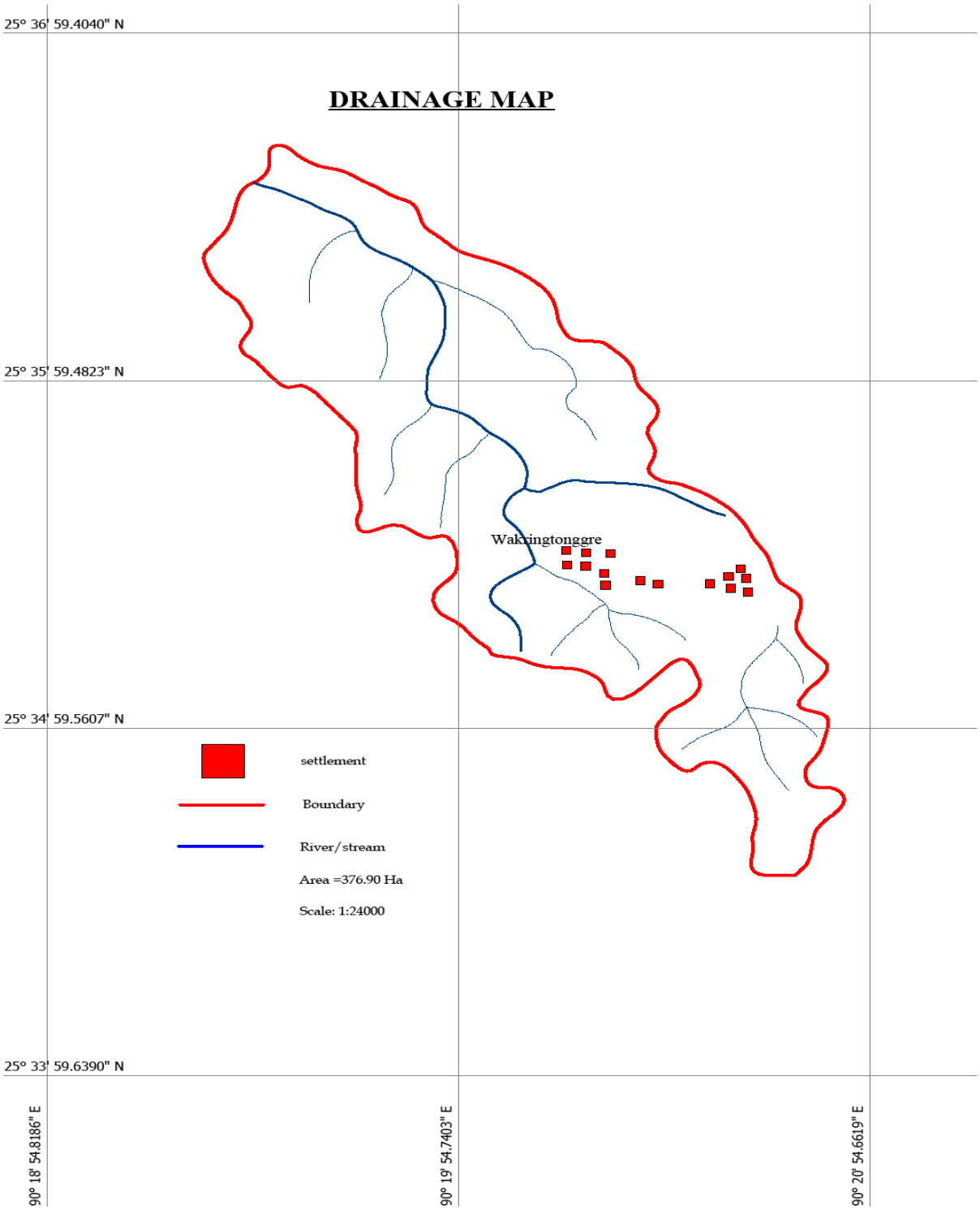
DRAINAGE MAP
25° 36' 59.4040" N
25° 35' 59.4823" N
25° 34' 59.5607" N
25° 33' 59.6390" N
90° 18' 54.8186" E
90° 19' 54.7403" E
90° 20' 54.6619" E
Wakringtonggre
settlement
Boundary
River/stream
Area =376.90 Ha
Scale: 1:24000

AGROCLIMATIC ZONE MAP

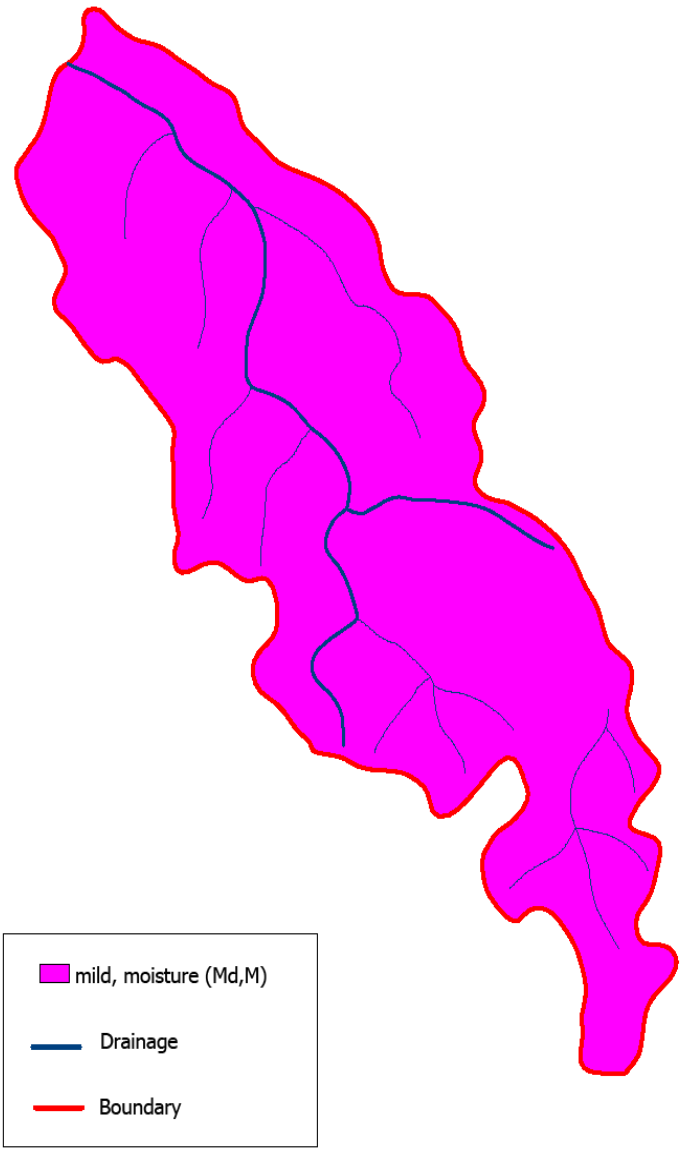

SOIL MAP

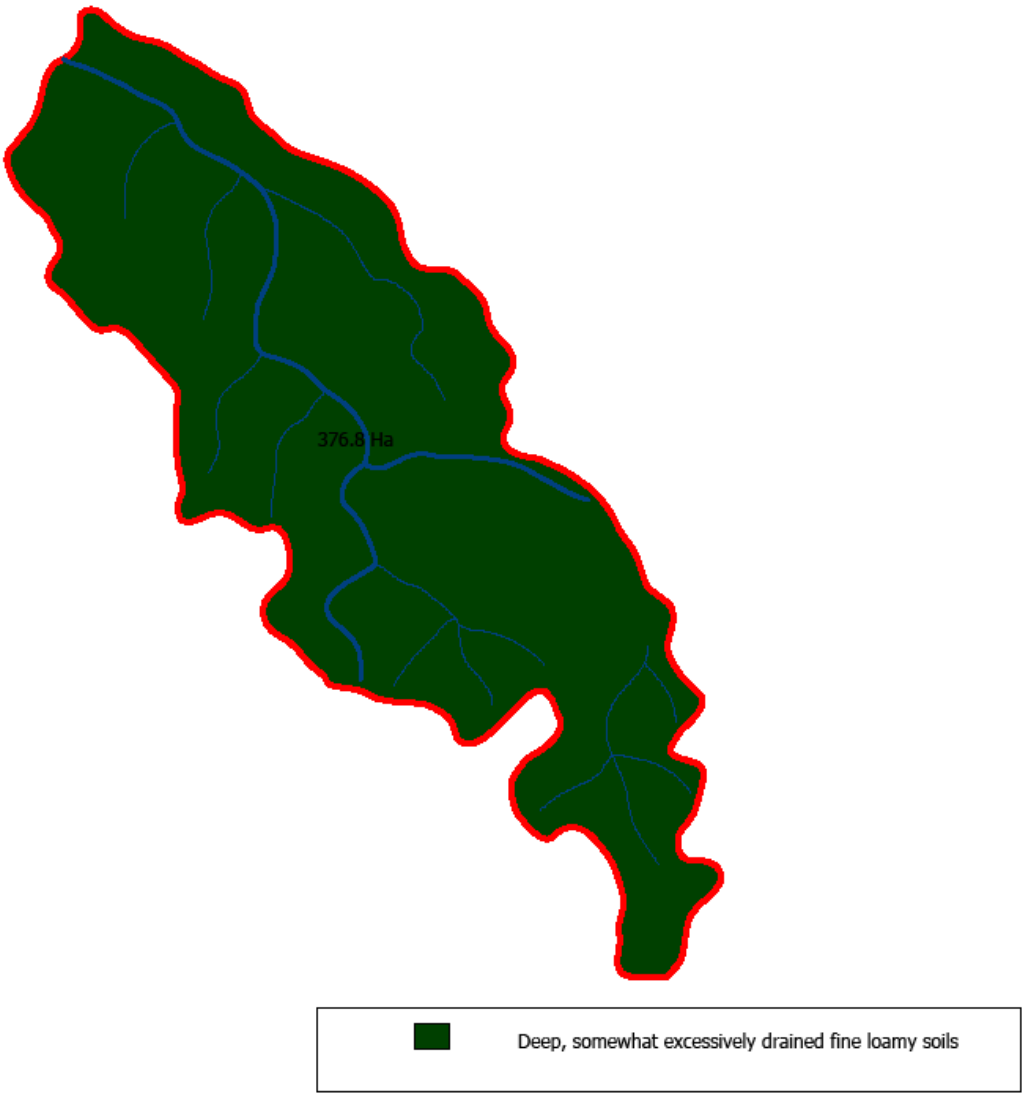
376.8 Ha
Deep, somewhat excessively drained fine loamy soils

LAND USE LAND COVER MAP

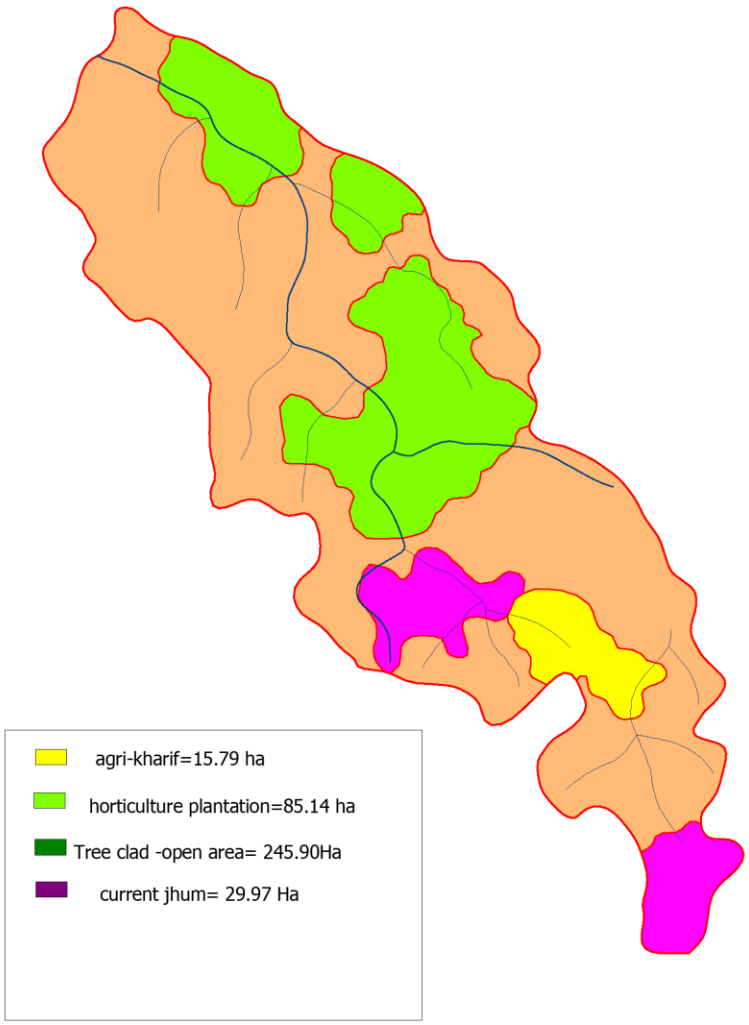

SLOPE MAP

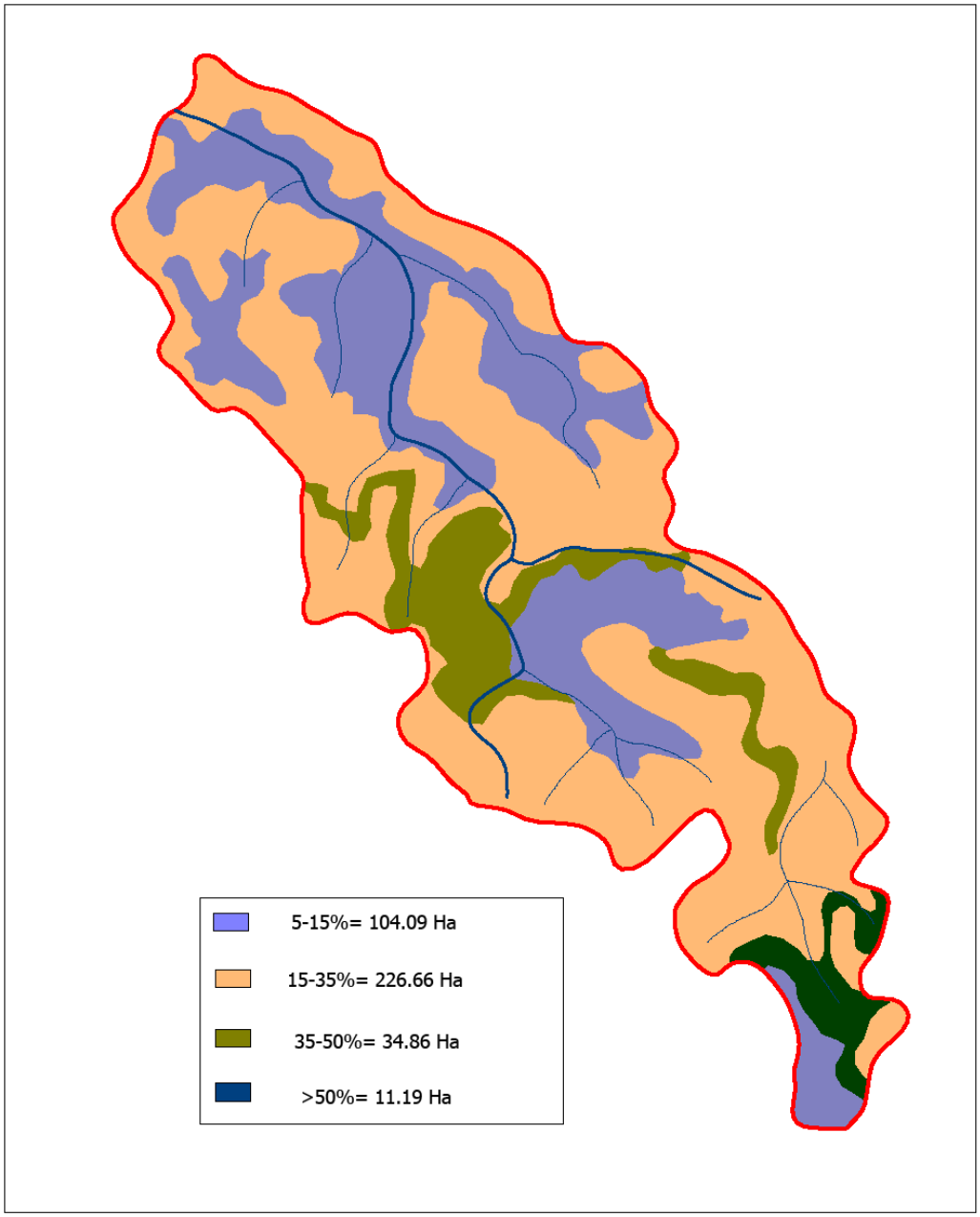

PROPOSED ENGINEERING MAP

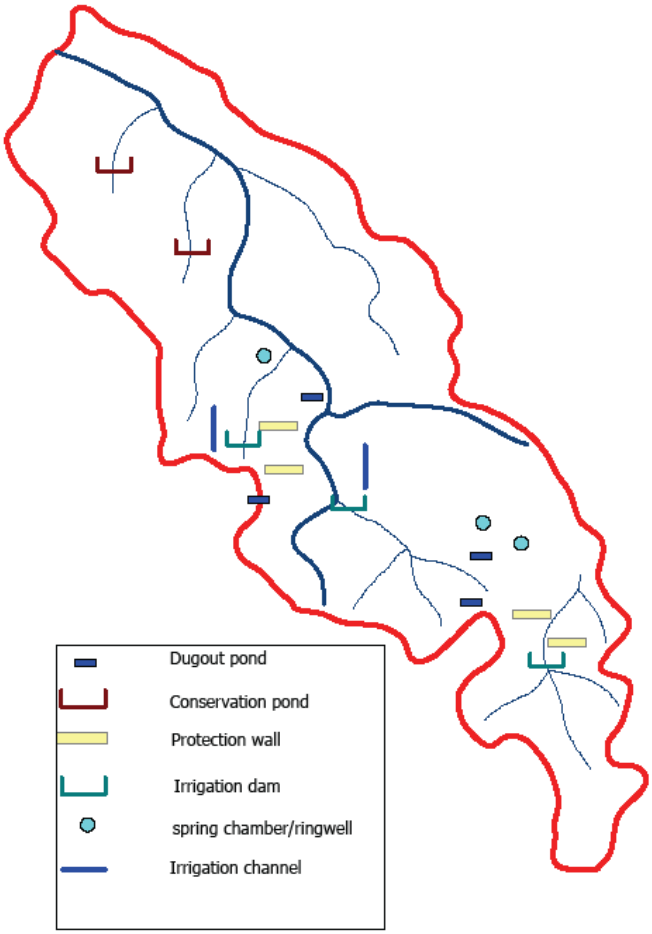

PROPOSED LAND USE MAP

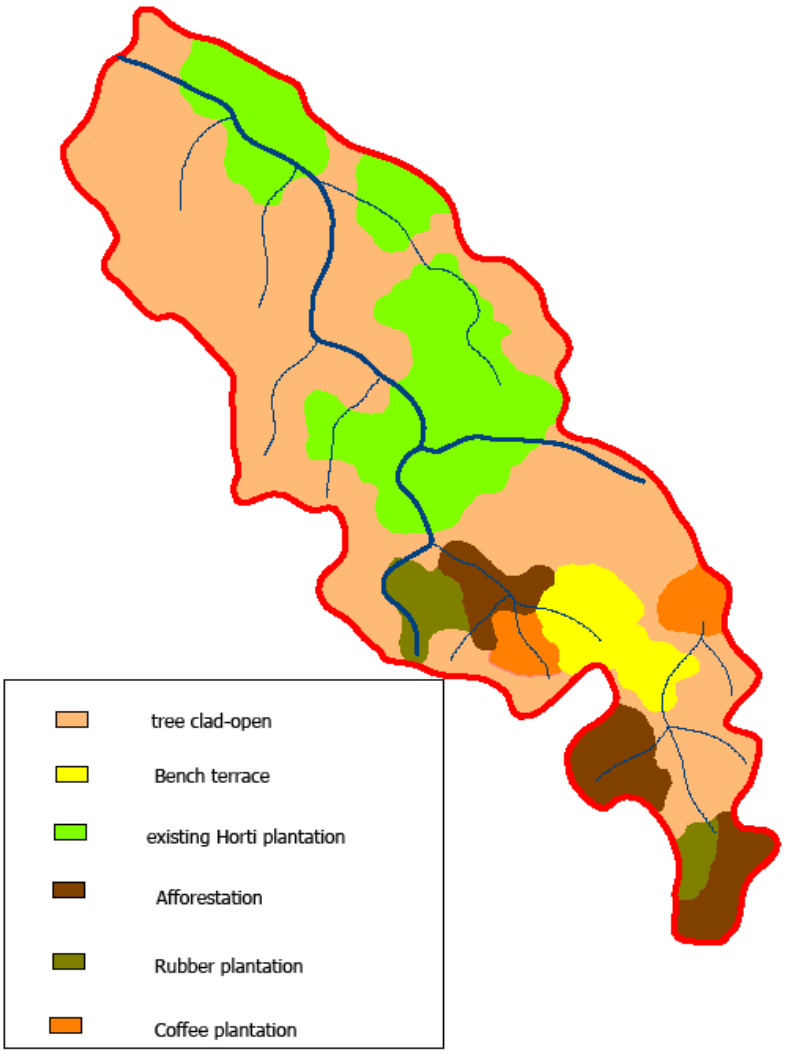

ANNEXURE II

SOCIO-ECONOMIC SURVEY DETAILS

SOCIO ECONOMIC SURVEY OF VILLAGE : WAKRINGKONGGRE UNDER I.W.M.P.

Sl.No.	Name of the head of the family	Male	Female	Total	Literate	Illiterate	Total	Agriculture(Ha.)		Horticulture	Livestock				Infrastructure
								Settled Area	Jhum Area		Cattle	Poultry	Piggery	Goatery	
1	2	3	4	5	6	7	8	9	10	11	12	13	14	15	16
1	Shri, Suben Marak	3	4	7	5	2	7				3	7	-	-	
2	" Alnish Sanngma	3	5	8	8	-	8				2	5	1	-	1 no. L.P. School
3	" Gilberth Sanngma	2	3	5	4	1	5				1	8	-	-	
4	" Grebilson Marak	5	3	8	8	-	8				2	3	-	3	No Electricity
5	" Chilben Marak	2	2	4	3	1	4				-	5	-	-	
6	" Repen Sangma	4	3	7	6	1	7				1	4	2	-	No Community Hall
7	" Bepalson Sangma	3	5	8	8	-	8				2	7	1	-	
8	" Tutan Marak	4	4	8	8	-	8				3	9	-	-	No Health Sub -
9	" Sengkal Sangma	4	4	8	6	2	8				4	3	2	-	centre
10	" Palnen Sangma	3	2	5	4	1	5				-	4	-	-	
11	" Neberose Sangma	2	3	5	5	-	5				-	7	-	-	No P.H.E. Water
12	" Bilju Sangma	2	4	6	6	-	6				-	5	-	-	supply
13	" Sompil Marak	2	4	6	6	-	6				1	9	1	-	
14	" Green Sangma	2	3	5	4	1	5				-	2	-	-	No P.D.S.
15	" Rojen Marak	2	4	6	6	-	6				2	7	-	2	
16	" Rotnu Marak	1	2	3	3	-	3				-	6	1	-	No Anganwadi
17	" Willaki Sangma	1	-	1	-	1	1				-	2	-	3	centre
18	" Balmenson Sangma	4	4	8	8	-	8				2	8	-	-	
19	" Grohon Marak	2	4	6	6	-	6				1	4	1	1	
20	" Senggi Marak	1	-	1	-	1	1				-	2	-	-	
21	" Gotnison Sangma	2	3	5	5	-	5				-	8	-	-	
22	" Sengrak Marak	2	1	3	-	3	3				-	3	-	-	

1	2														
23	Shri,	Libingston Marak	1	2	3	3	-	3				-	8	-	2	
24	"	Tanat Sangma	2	3	5	5	-	5				1	5	1	-	
25	"	Nigen Marak	3	4	7	-	7	7				4	3	2	-	
26	"	Wilberth Marak	1	2	3	3	-	3				-	7	-	-	
27	"	Dinat Sangma	4	3	7	7	-	7				2	2	1	-	
28	"	Bronson Sangma	1	3	4	4	-	4				-	9	-	-	
29	"	Chajing Marak	3	3	6	6	-	6				3	3	-	-	
30	"	Wagan Marak	1	-	1	-	1	1				-	6	-	-	
31	"	Subutson Marak	2	2	4	2	2	4				-	5	-	-	
32	"	Dosillin Sangma	3	4	7	7	-	7				3	8	2	3	
33	"	Markin Sangma	1	3	4	4	-	4				1	2	-	-	
34	"	Menri Sangma	-	2	2	1	1	2				-	8	-	-	
35	"	Ajitson Sangma	3	3	6	6	-	6				3	5	1	-	
		Total.	**81**	**101**	**182**	**157**	**25**	**182**				**41**	**189**	**16**	**14**	

SOCIO ECONOMIC SURVEY OF VILLAGE : SARINGRE.

Sl.No.	Name of head of family	Male	Female	Total	Literate	Illiterate	Total	Agri. Settled Area(Ha.)	Agri. Jhum Area(Ha.)	ture(Ha.)	Livestock Cattle	Livestock Poultry	Livestock Piggery	Livestock Goatery	Infrastructure
1	2	3	4	5	6	7	8	9	10	11	12	13	14	15	16
1	" Jenggat Marak	1	5	6	4	2	6				2	6	1	2	
2	" Jonen Marak	2	2	4	3	1	4				-	4	-	-	
3	" Inding Marak	4	2	6	5	1	6				3	8	1	-	1 no. L.P. School
4	" Sengrak Marak	4	1	5	3	2	5				1	3	-	2	
5	" Arben Marak	3	2	5	4	1	5				-	8	-	1	
6	" Diren Sangma	2	5	7	5	2	7				4	2	2	-	No Electricity
7	" Janen Sangma	1	2	3	3	-	3				-	7	-	2	
8	" Alison Sangma	5	2	7	5	2	7				5	5	1	3	
9	" Grithu Marak	1	1	2	2	-	2				-	9	-	-	No PDS
10	" Jun Sangma	2	1	3	2	1	3				-	4	-	-	
11	" Nasan Marak	3	2	5	4	1	5				2	6	-	-	
12	" Rengmat Marak	1	2	3	2	1	3				-	8	-	-	No Annganwadi Centre
13	" Ugen Sangma	4	3	7	5	2	7				3	5	1	4	
14	" Stenstar Sangma	1	3	4	3	1	4				-	9	-	-	
15	Smt, Winjak Sangma	-	1	1	-	1	1				-	2	-	-	
	Total	**34**	**34**	**68**	**50**	**18**	**68**				**20**	**86**	**6**	**14**	

ANNEXURE III

COST ESTIMATES

COST ESTIMATE PER UNIT FOR INTEGRATED FARMING SYSTEM (IWMP).

A.	*Piggery ;*		
	i) Construction of sty @ Rs. 20000/- each	*Rs.*	*20000.00*
	ii) Cost of Piglets - 10 nos. @ Rs. 20000/- each	*Rs.*	*20000.00*
	iii) Cost of feeds for 6 months (L/s)	*Rs.*	10000.00
B.	*Construction of Dug out Pond (25.00 x 25.00) m (as per estimate)*	*Rs.*	*60000.00*
C.	*Supply of fingerlings -1500 nos. @ Rs.3000/- per 1000 nos. (L/s)*	*Rs.*	*4500.00*
D.	*Kitchen Garden ;*		
	i) Site preparation including Bunding, shaping etc.	*Rs.*	*3500.00*
	ii) cost of F.Y.M. including cost of applicaton	*Rs.*	*4000.00*
	iii) Cost of equipmqnts and tools etc.	*Rs.*	*1500.00*
	iv) Cost of seeds including sowing etc.	*Rs.*	*1500.00*
	G. Total	***Rs.***	***125000.00***

(Rupees one lakh twenty five thousand) only.

MODEL NORMS PER HACTARE FOR AFFORESTATION (NON-SAL) FOR IWMP

(Rate as per PWD, SOR for R & B 2008-09)

Spacing = (6.00 x 5.50) m
Plant Density = 300 nos.

A. **Preliminary Works .**

i) Jungle clearance etc. -5mandays @ Rs. 100/- per manday	*Rs.*	*500.00*
ii) Pit digging (0.30 x 0.30 x 0.30) m - 300 nos. @ Rs. 4/- each	*Rs.*	*1200.00*
Sub-total	***Rs.***	***1700.00***

B. **I Year Planting .**

i) Cost of Planting materials - 300 nos. @ Rs. 8/- each	*Rs.*	*2400.00*
ii) Cost of Planting - 300 nos. @ Rs. 2/- each	*Rs.*	*600.00*
iii) Weeding - 2 times - 20 mandays @ Rs. 100/- per manday	*Rs.*	*2000.00*
iv) Fire protection measures - 5 mandays @ Rs. 100/- per manday	*Rs.*	*500.00*
Sub-total	***Rs.***	***5500.00***

C. **II nd Year Planting .**

i) Vacancy refilling (10%)	*Rs.*	*400.00*
ii) Weeding - 2 times - 20 mandays @ Rs. 100/- per manday	*Rs.*	*2000.00*
iii) Fire protection measures - 5 mandays @ Rs. 100/- per manday	*Rs.*	*500.00*
Sub-total	***Rs.***	***2900.00***

Grand Total 10100.00

(Rupees ten thousand) only.

MODEL NORMS PER HACTARE FOR TERRACING (IWMP)

A. ***Technical Parameters .***

i) Average terrace width recommended (m)	*15.00*
ii) Vertical Interval (VI) = W x S/100 - S	*2.5*
iii) Terrace Length (m) = A/W + VI	*767.00*
iv) Earthwork = 12.50 x W x S m^3	*1200.00*
v) Shoulder Bund Length	*779.00*
vi) Shoulder Bund Length x-section (m^2)	*0.08*
vii) Earthwork for shoulder Bund (m^3)	*62.32*
viii)Area available for cultivation (Ha.)	*0.87*

B. ***Cost estimate .***

		Amount.
i) Jungle clearance including uprooting of stumps (L/s)		*2000.00*
ii) Cost of terracing @ Rs. 10/- m^3		*15000.00*
iii) Cost of shoulder Bund @ Rs. 7/- m^3		*850.00*
iv) Dressing, shaping and grading of terrace		*950.00*
v) Water Disposal structure (L/s)		*1200.00*
	G. Total	***20000.00***

(Rupees twenty thousand) only .

MODEL NORMS PER HA. FOR IMPROVEMENT OF DEGRADED FOREST (IWMP).

(Rate as per PWD SOR for R & B for 2008-09)

A. Preliminary works .

i) site clearance 3 mandays @ Rs. 100/- each	*Rs.*	*300.00*
ii) Pit digging (0.30 x 0.30 x 0.30) m 100 nos. @ Rs. 4/- each	*Rs.*	*400.00*
sub - total	***Rs.***	***700.00***

B. I st year Planting .

I) Cost of planting material 100 nos. @ Rs. 8/- each	*Rs.*	*800.00*
ii) Cost of planting 100 nos. @ Rs. 2/- each	*Rs.*	*200.00*
iii) Round weeding 4 times - 5 mandays @ Rs. 100/- each	*Rs.*	*500.00*
iv) Plant protection measures 4 mandays @ Rs. 100/- each	*Rs.*	*400.00*
sub-total	***Rs.***	***1900.00***

C. II year Planting .

i) Refilling 10%	*Rs.*	*100.00*
ii) Round weeding - 4 times- 5 mandays @ Rs. 100/- each	*Rs.*	*500.00*
iii) Plant protection measures - 4 mandays @ Rs. 100/- each	*Rs.*	*400.00*
Sub-total	***Rs.***	***1000.00***
Grand Total	***Rs.***	***3600.00***

(Rupees three thousand six hundred) only.

MODEL NORMS PER HACTARE FOR RUBBER CULTIVATION .

Spacing - (4.75 x 4.75) m
Plant density - 450 nos.

A. ***Preliminary works .***

i) Cost of seedling …. L/s…….. *Rs. 800.00*
ii) Box terracing including pit digging (0.45 x 0.45 x 0.45) m ..L/s…
……Rs. 1350.00 *500.00*
sub-total Rs. 9000.00 ***1300.00***

B. ***I st Year Planting .***

i) Cost of Fertilisers (NPK 45:30:45) including transportation *Rs. 2000.00*
ii) Cost of 2 times application (June-July and September - October)
14 mandays @ Rs. 100/- each *Rs. 1400.00*
iii) 1st year weeding *Rs. 1200.00*
Sub-total Rs. 4600.00

C. ***II nd year maintenance .***

i) 2nd year weeding *Rs. 2700.00*
Sub-total Rs. 2700.00

Grand Total Rs. 8600.00

(Rupeeseight thousand six hundred) only.

ESTIMATE FOR THE CONSTRUCTION OF IRRIGATION DAM UNDER INTEGRATED WATERSHED MANAGEMENT PROGRAMME AS PER PWD SCHEDULE OF RATES FOR (R&B) ROADS & BRIDGES 2009-10.

1/6
7. Earth work in excavation for foundation of structure ……. technical specification etc.
Foundation :-

Dam	1	x	8.00	x	1.20	x	1.00	=	9.60	m^3		
W/Wall	2	x	2.50	x	1.20	x	1.00	=	9.60	m^3		
S/Wall	2	x	4.00	x	0.30	x	1.00	=	9.60	m^3		
T/Wall	1	X	8.00	X	0.30	X	1.00	=	9.60	m^3		
Apron	1	x	8.00	x	3.00	x	0.40	=	9.60	m^3		
L/Channel	1	x	20.00	x	1.80	x	1.00	=	9.60	m^3		
									9.60	m^3		
							@	Rs	101/	m^3	Rs	969.60

Plain cement concrete M-10(1:3:6 nominal mix) in levelling …….

2/75

…….per drawing and technical specification etc.

Foundation Base :

Dam	1	x	8.00	x	1.20	x	0.10	=	0.96	m³		
W/Wall	2	x	2.50	x	1.20	x	0.10	=	0.60	m³		
S/Wall	2	x	4.00	x	0.30	x	0.10	=	0.24	m³		
T/wall	1	x	8.00	x	0.30	x	0.10	=	0.24	m³		
									2.04	m³		
							@	Rs	3500/	m³	Rs	7140.00

3/141(B)Plain cement concrete in open foundation complete……

specification etc.

PCC Grade M20

Dam	1	x	8.00	x	1.00	x	1.00	=	8.00	m³		
W/wall	2	x	2.50	x	1.00	x	1.00	=	5.00	m³		
S/wall	2	x	4.00	x	0.30	x	1.00	=	2.40	m³		
T/wall	1	x	8.00	x	0.30	x	0.30	=	0.72	m³		
									16.12			
							@	Rs	4535/	m³	Rs	73104.20

4/141(F) Plain cement concrete in open foundation complete…….

specification etc.

PCC Grade M30

Dam	1	x	8.00	x	(1.00 + 0.60)/2			x	1.00	=	6.40	m³	
W/wall	2	x	2.50	x	(1.00 + 0.60)/2			x	1.60	=	6.40	m³	
S/wall	2	x	4.00	x	0.30	x	1.60			=	3.84	m³	
Apron	1	x	8.00	x	3.00	x	0.40			=	9.60	m³	
T/wall	1	x	8.00	x	0.30	x	0.40			=	0.96	m³	
L/channel	2	x	20.00	x	0.15	x	0.70			=	2.10	m³	
	1	x	20.00	x	1.50	x	0.20			=	6.00	m³	
											35.30	m³	
							@	Rs	4535/	m³	Rs	160085.50	

5/7

8. Plastering with cement mortar (1:4), 15 mm thick on brickwork …… technical specification.

Dam :	1	x	8.00	x	1.00	x	0.05	=	0.40	m^2		
	1	x	8.00	x	0.60	x	0.05	=	0.24	m^2		
W/wall :	2	x	2.50	x	1.00	x	0.05	=	0.25	m^2		
	2	x	2.50	x	1.00	x	0.05	=	0.25	m^2		
	2	x	2.50	x	0.60	x	0.05	=	0.15	m^2		
S/wall :	2	x	4.00	x	1.60	x	0.05	=	0.64	m^2		
	2	x	4.00	x	1.60	x	0.05	=	0.64	m^2		
	2	x	4.00	x	0.60	x	0.05	=	0.24	m^2		
Apron :	1	x	8.00	x	3.00	x	0.05	=	1.2	m^2		
	1	x	8.00	x	4.00	x	0.05	=	1.6	m^2		
T/wall :	1	x	8.00	x	0.30	x	0.05	=	0.12	m^2		
L/Chan :	1	x	20.00	x	1.50	x	0.05	=	1.5	m^2		
	2	x	20.00	x	0.70	x	0.05	=	1.4	m^2		
	2	x	20.00	x	0.15	x	0.05	=	0.3	m^2		
									8.93	m^2		
							@	Rs.	130/-	m^2	Rs.	1160.90

5/6

7 Earth work in excavation for foundation of structure …… technical specification etc.

E/channel	1	x	113.75	x	$\frac{(1.00 + 0.75)}{2}$	x	0.75	=	74.65	m^3		
							@	Rs	101/-	m^3	Rs	7539.65
										Total.	Rs.	249999.85
										Say,	***Rs.***	***250000.00***

(Rupees two lakhs fifty thousand) only.

Submitted,

(C. H. D. Sangma)
Range Officer,
Cental Soil & water Conservation (T) Range,Tebronggre,
West Garo Hills.

PLAN FOR C. C. IRRIGATION DAM

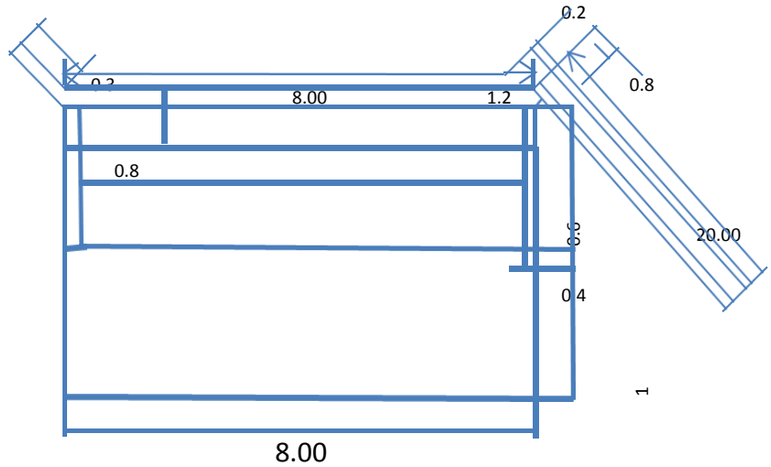

PLAN

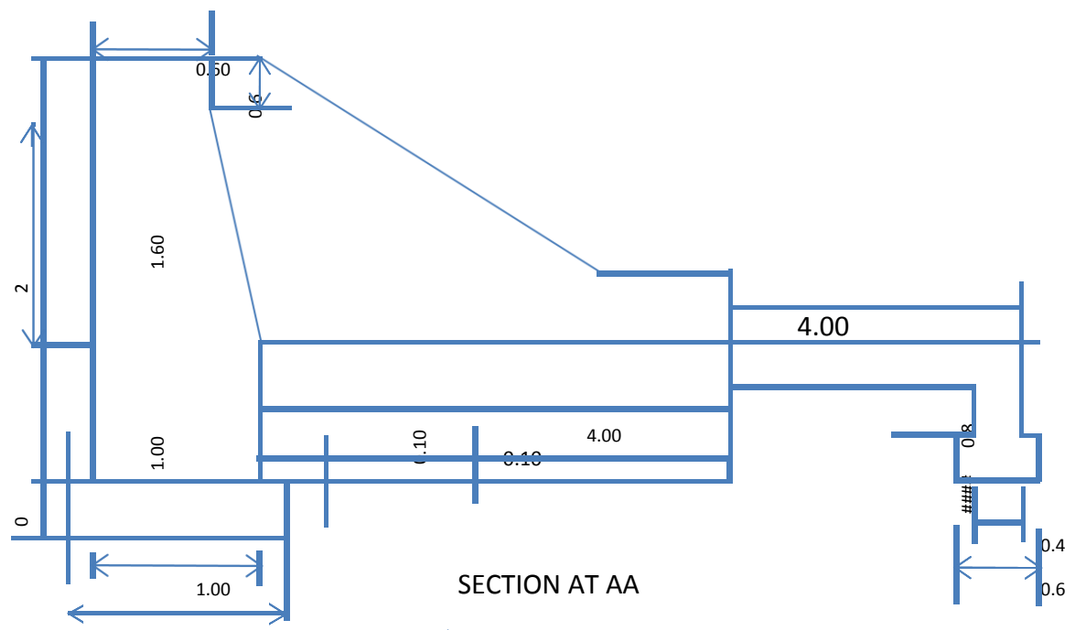

SECTION AT AA

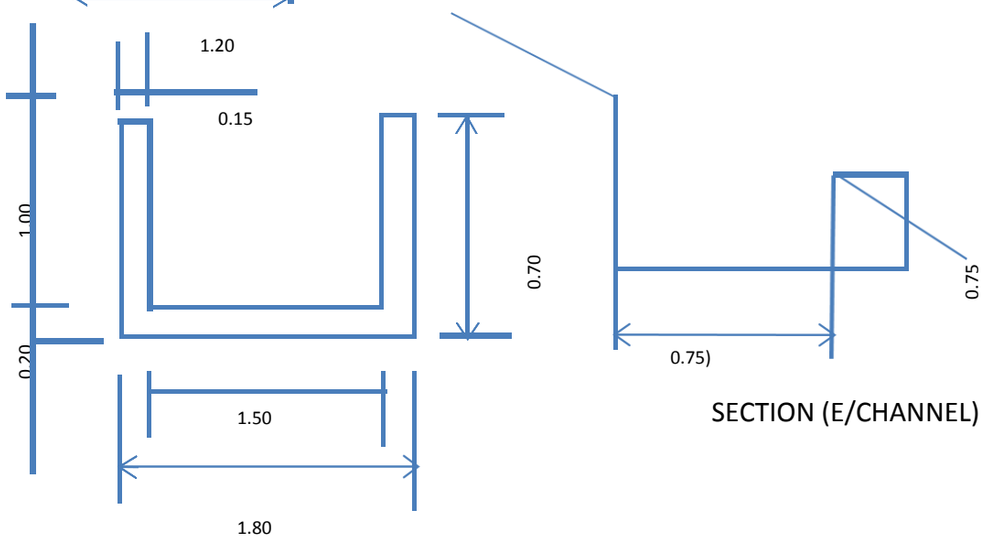

SECTION (E/CHANNEL)

SECTION (L/CHANNEL)

ESTIMATE FOR CONSTRUCTION OF C.C. CHANNEL UNDER INTEGRATED WATERSHED MANAGEMENT PROGRAMME AS PER PWD SCHEDULE OF

RATES FOR ROADS & BRIDGES FOR THE YEAR 2009-10

1 Site preparation…….L/s…… Rs. 112.00

2/67. Earth work in excavation for foundaton……approved material.
……. approved material.

1	x	30.00	x	1.00	x	0.75	=	22.50	m³			
						@	Rs	101/	m³	=	Rs	2272.50

3/103 Providing and laying of dry rubble flooring…….
specification etc.
Boulder
soling :

1	x	30.00	x	1.00	x	0.10	=	3.00	m³			
						@	Rs	1065/	m³	=	Rs	3195.00

4/141(A)Plain cement concrete in open foundation …….
specification etc.
PCC
Grade
M15 15

2	x	30.00	x	0.20	x	0.60	=	7.20	m³			
1	x	30.00	x	0.60	x	0.20	=	3.60	m³			
								10.80	m³			
						@	Rs	4090/-	m³	=	Rs	44172.00

5/78. Plastering with cement mortar(1:4) 15mm thick …….
technical specification etc.

2	x	30.00	x	0.60	x	0.05	=	1.80	m³			
2	x	30.00	x	0.20	x	0.05	=	0.60	m³			
1	x	30.00	x	0.60	x	0.05	=	0.90	m³			
								3.30	m³			
						@	Rs	130/-	m³	=	Rs	429.00

Grand Total	Rs	50068.50
Say	**Rs**	**50000.00**

(Rupees fifty thousand) Only.

PLAN FOR C.C.IRRIGATION CHANNEL.

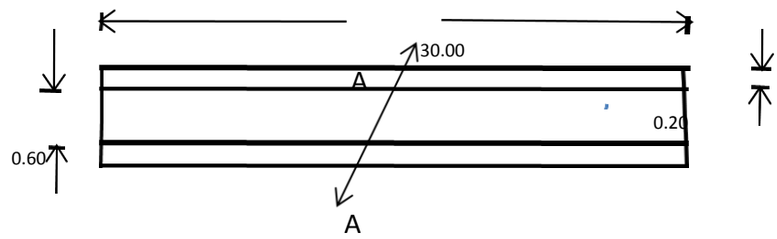

PLAN

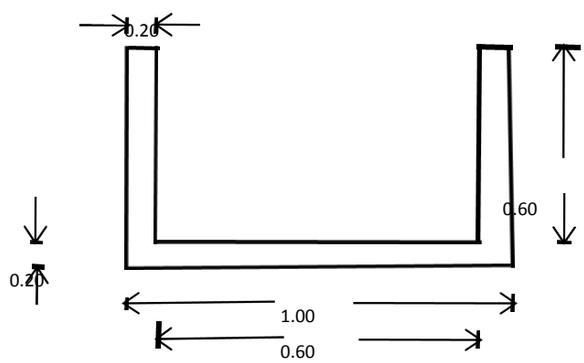

CROSS-SECTION AT 'AA'

ESTIMATE FOR CONSTRUCTION OF POND WITH C.C.CORE WALL UNDER INTEGRATED WATERSHED MANAGEMENT PROGRAMME (IWMP) AS PER SCHEDULED OF RATES FOR THE YEAR 2009-10 (ROADS & BRIDGES)

1/134 Earth work in excavation of foundation of structure as per drawing and technical specification including setting ,construction shoring & bracing,removal of tumps and other deleterious matter, dressing of sides and bottom and backfilling with appron material.

I. Ordinary
Soil :
Corewall :

1	x	12.00	x	1.00	x	1.00	=	12.00	m^3	
		@	Rs.	47	m^3					Rs.564.00

2/137 P.C.C. 1:3:6 in foundation (PCC 1:3:6 nominalmix infoundation with crushed stone aggregate 40mm nominal size mechanically mixed, placed in foundation and compacted by vibration including curing for 14
days.
Foundation
Base :

1	x	12.00	x	1.00	x	0.10	=	1.20	m^3	
								1.20	m^3	
		@	Rs.	3571	m^3					Rs.4,285.20

3/141 PCC in open foundation complete as per drawing and technical specifications.
A. PCC Grade M15.
Corewall :

1	x	12.00	x(	$\frac{1.00 + 0.60}{2}$	)	x 2.5	=	24.00	m^3	

Overflow
outlet :

1	x	5.00	x	2.00	x	0.50	=	5.00	m^3	
2	x	5.00	x	0.75	x	0.50	=	3.75	m^3	
								32.75	m^3	
		@	Rs.	4090/	m^3					Rs.133947.50

4/29 Construction of embankment with approved materials obtained

from burrow pits with a lifting to 1.5m, transporting to site, spreading, grading to required slope and compacting to meet
requirement of tables 300.1 and 300.2 with a lead upto 1000m as per technical specification clause 301.5.
Earthfilling:

	x	12.00				4.0	)	3.0	=	229.50		
1			x(	8.75	+	0	x	0			m^3	
					2							
					m							
		@	Rs.	269/	^{3}							Rs.61735.50

2

5/37 Furnishing and laying of live sods of perrenial turf forming grass on embankment slope, verges or other locations shown on the drawing or as directed by the Engineer including preparation of ground, fetching of sods and watering as per technical specification clause 309
D/S
:

		12.00				5.2		6.0	=	189.00		
1	x		x	0.50	x	5	x	0			m^2	
			Rs		m							
		@	.	46	^{2}							Rs.8,694.00

6/100 Providing and laying pitching on slopes laid over prepared filter media as per drawing and technical specifications clause 1302.

<u>I. Boulder :</u>
U/S
:

		12.00				3.5		4.4	=			
1	x	0	x	0.20	x	0	x	0		36.96	m^3	
			Rs		m							
		@	.	1086	^{3}							Rs.40,138.56

7/78 Plastering with cement morter (1:4) 15mm thick on brickwork as per technical specifications.

Overflow
outlet :

						0.2		=			
1	x	5.00	x	2.00	x	0			2.00	m^2	
						0.2		=			
2	x	5.00	x	1.50	x	0			3.00	m^2	
									5.00	m^2	
		@	Rs	130	m						Rs.650.00

2

.

TOTAL :	Rs.2,50,014.80
say,	**250000.00**

(Rupees two lakh fifty thousand) only.

Submitted,

C.C. CORE WALL DAM

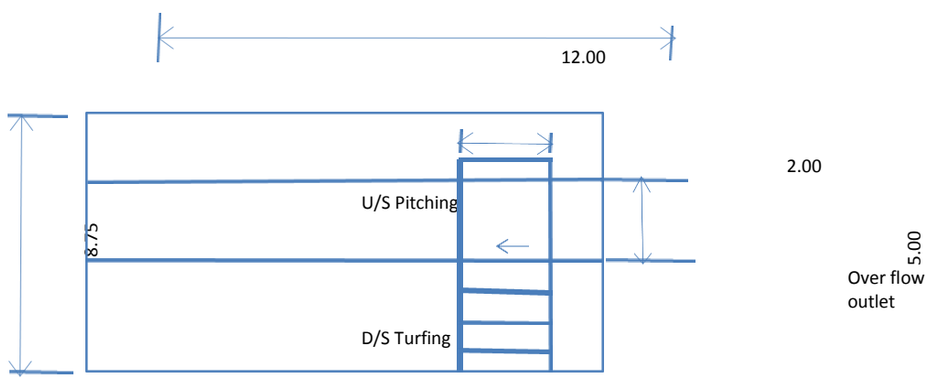

PLAN

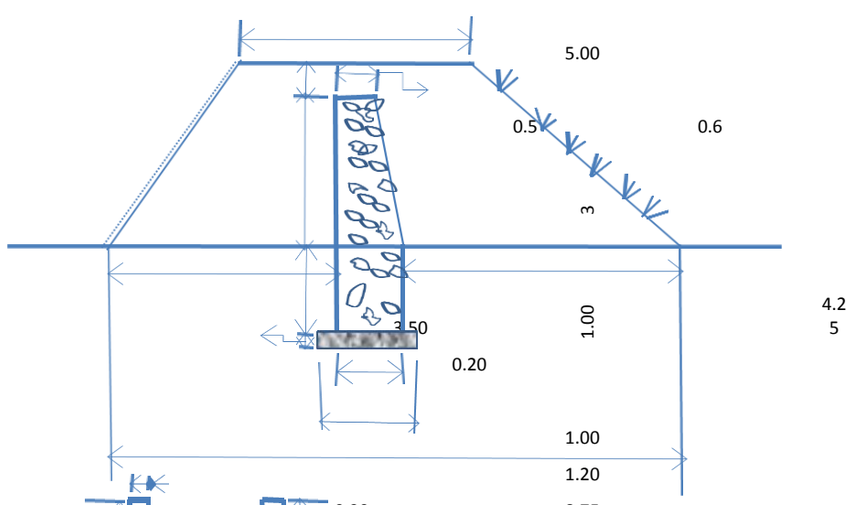

SECTION

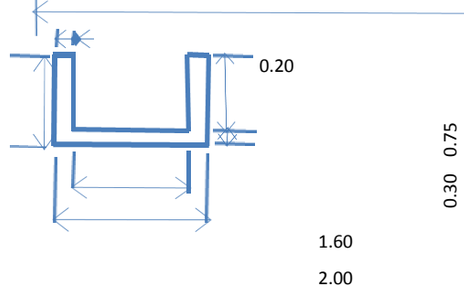

SECTION (OVER FLOW OUTLET)

ESTIMATE FOR THE CONSTRUCTION OF DUGOUT CUM FISHERY POND UNDER INTEGRATED WATERSHED MANAGEMENT PROGRAMME AS PER P.W.D. SCHEDULE OF RATES FOR ROADS & BRIDGES AND E & D WORKS FOR THE YEAR 2009-10.

1. Site preparation ……. L/s …….. Rs. 150.00

2/67.Earthwork in excavation for foundation of structures upto 3 m depth as per…… ……. With approved material.

$$\frac{D}{6}\left\{\frac{A+4}{B+C}\right\} m^3$$

A=	{	30.00	X	30.00	}	m	=	900.00	m³
B=	{	27.00	X	27.00	}	m	=	729.00	m³
C=	{	24.00	X	24.00	}	m	=	576.00	m³
D=		1.34 m							

$$\frac{D}{6}\left\{\frac{A+4}{B+C}\right\} m^3$$

$$\frac{1.51}{6}\left\{900.00 + \left(4 \times 729.00\right) + 576.00\right\} m^3 = 980.87\ m^3$$

@ Rs 101/- m³ …….. Rs. 99,067.87

Total : Rs. 99,217.87

Say, Rs. 99,200.00

Rupees (ninety nine thousand two hundred) only

PLAN FOR DUG-OUT POND

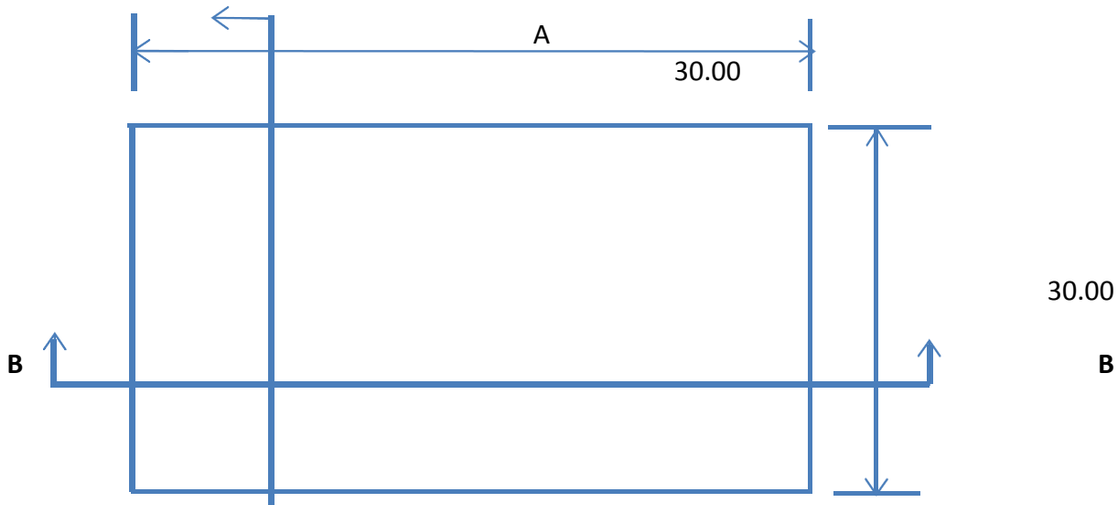

PLAN

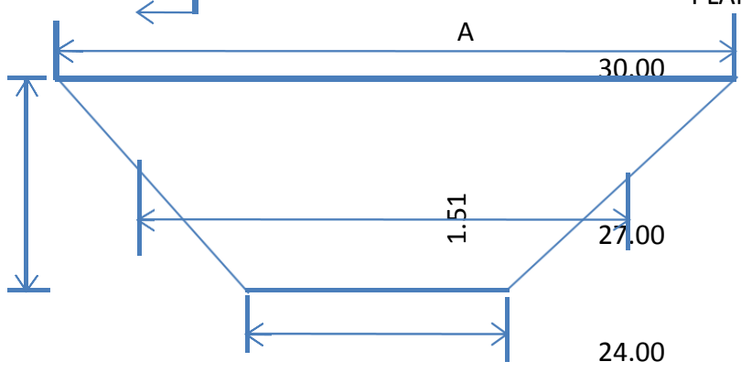

SECTION-AA

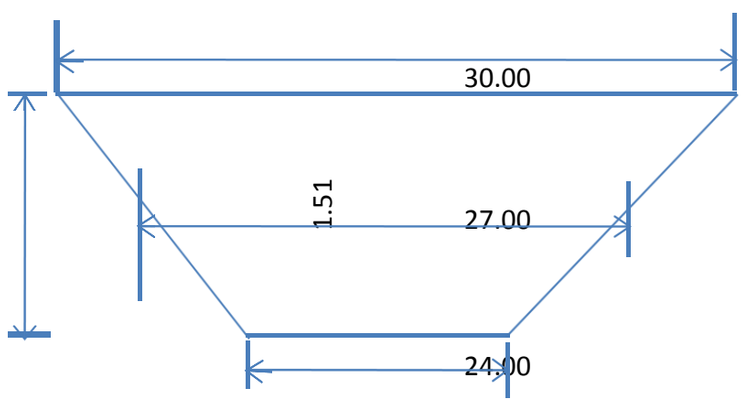

SECTION-BB

ESTIMATE FOR THE CONSTRUCTION OF C. C. PROTECTION WALL UNDER INTEGRATED WATERSHED MANAGEMENT PROGRAMME AS PER P.W.D. SCHEDULE OF RATES FOR ROADS BRIDGES AND E & D WORKS FOR THE YEAR 2009-10.

1	Site preparation …….. L/s…….													Rs.	620.00
2/134.	Excavaiton for structure…… approved material.														
	I. Ordinary rock.														
		1	x	8.00	x	0.60	x	0.75	=	3.60	m^3				
								@	Rs.	68/-	m^3			Rs.	244.80
3/137.	P C C 1:3:6 in foudation……..														
	Foudation Base														
		1	x	8.00	x	0.60	x	0.10	=	0.48	m^3				
								@	Rs.	3571/-	m^3			Rs.	1714.08
4/141	Plain cement concrete…….. Technical specifications. A. PCC Grade M 15														
		1	x	8.00	x	0.60	x	0.65	=	3.12	m^3				
								@	Rs.	3571/-	m^3			Rs.	11141.52
5/141.	Plain Cement concrete…… technical specifications. B. PCC Grade M 20														
	1	x	8.00	x	(0.60 + 0.40) / 2		x	2.00	=	8.00	m^3				
								@	Rs.	4535/-	m^3			Rs.	36280.00
										Total.	=			Rs.	50000.40
										Say,				***Rs.***	***50000.00***

(Rupees fifty thousand) only.

Submitted,

(C. H. D. Sangma)
Range Officer,
Cental Soil & water Conservation (T) Range,Tebronggre,
West Garo Hills.

PLAN FOR STONE MASONRY PROTECTION WALL

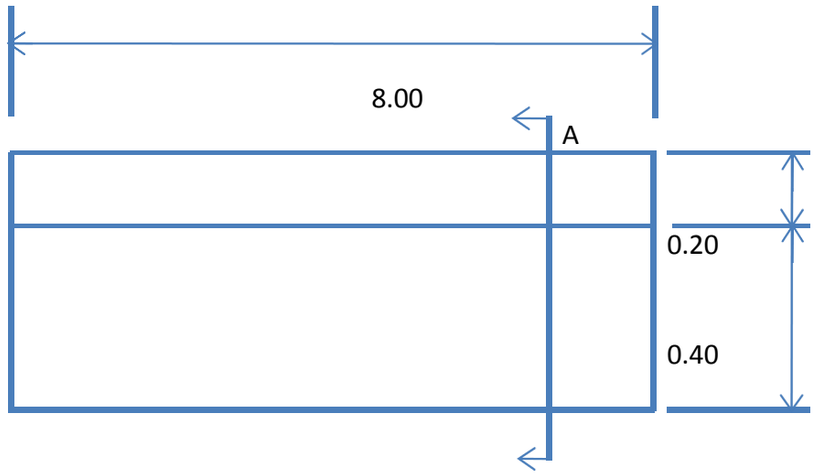

PLAN A

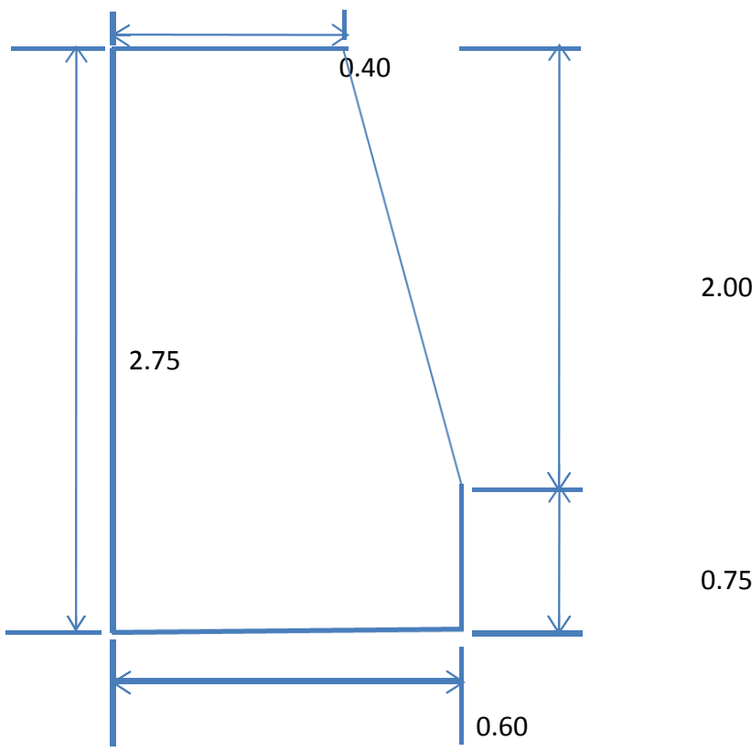

COST ESTIMATE FOR THE CONSTRUCTION OF SPRING CHAMBER UNDER INTEGRATED WATERSHED MANAGEMENT PROGRAMME AS PER P.W.D. SCHEDULE OF RATES FOR ROADS & BRIDGES AND E & D WORKS FOR THE YEAR 2009-10.

1	Site preparation …….. L/S ……										Rs.	1200.00
1/67.	Earth work in excavation for foundation of structure …….											
	technical specification etc.											
	Foundation :-											
	Storage	1	x	2.00	x	2.00	x	1.00	=	4.00	m^3	
	Platform	1	x	2.00	x	2.00	x	0.50	=	2.00	m^3	
	Drain	1	x	2.50	x	0.70	x	0.50	=	0.88	m^3	
										6.88	m^3	
								@	Rs	101/	m^3	Rs 694.88
2/103	Providing and laying of dry rubble……											
	…….. Specifications clause 1303.3.											
	Platform	1	x	2.00	x	2.00	x	0.10	=	0.40	m^3	
	Storage	3	x	2.00	x	0.25	x	0.75	=	1.13	m^3	
										1.53	m^3	
								@	Rs	1065/	m^3	Rs 1629.45
3/141.E.	R.C.C. in open foudation ……											
	specifications etc.											
	RCC Grade M25											
	Column	2	x	0.25	x	0.25	x	4.00	=	0.50	m^3	
		2	x	0.25	x	0.25	x	3.75	=	0.47	m^3	
	Slab	1	x	2.40	x	2.40	x	0.15	=	0.86	m^3	
	Beam	3	x	2.00	x	0.25	x	0.30	=	0.45	m^3	
										2.28	m^3	
								@	Rs	5727/	m^3	Rs 13057.56
4/141.D.	P.C.C. in open foundation …… specifications.											
	P.C.C. Grade M25											
	Wall	3	x	2.00	x	0.25	x	0.70	=	1.05	m^2	
		1	x	2.00	x	0.25	x	2.00	=	1.00	m^2	
		1	x	2.00	x	0.25	x	2.95	=	1.48	m^2	
		1	x	2.00	x	0.25	x	2.70	=	1.35	m^2	
		1	x	2.00	x	0.25	x	2.70	=	1.35	m^2	
	Paltform	1	x	2.00	x	2.00	x	0.30	=	1.20	m^2	
	Drain	2	x	2.50	x	0.15	x	0.50	=	0.38	m^2	
		1	x	2.50	x	0.40	x	0.20	=	0.20	m^2	
										8.00	m^2	
								@	Rs.4941/-		m^3	Rs. 39528.00
											Sub-total =	***Rs. 54909.89***
											……C.O….	
								2				
											B.F. =	Rs. 54909.89
5/78.	Plastering with cement mortar (1:4), 15 mm thick on brickwork											
	…… technical specification.											
	Wall			2	x	2.00	x	2.25	=	9.00	m^2	
				2	x	2.00	x	1.95	=	7.80	m^2	

	2	x	2.00	x	2.70	=	10.80	m²			
Slab	1	x	2.40	x	2.40	=	5.76	m²			
	2	x	2.40	x	0.15	=	0.72	m²			
Platform	1	x	2.00	x	1.00	=	2.00	m²			
Drain	2	x	2.00	x	0.15	=	0.60	m²			
	2	x	2.00	x	0.50	=	2.00	m²			
	1	x	2.00	x	0.40	=	0.80	m²			
							39.48	m²			
					@	Rs.	130/-	m²		Rs.	5132.40
									Total	*Rs.*	*60042.29*
									Say,	***Rs.***	***60000.00***

(Rupees sixty thousand only)

Submitted,

(C. H. D. Sangma)
Range Officer,
Cental Soil & water Conservation (T) Range,Tebronggre,
West Garo Hills.

PLAN FOR SPRING CHAMBER

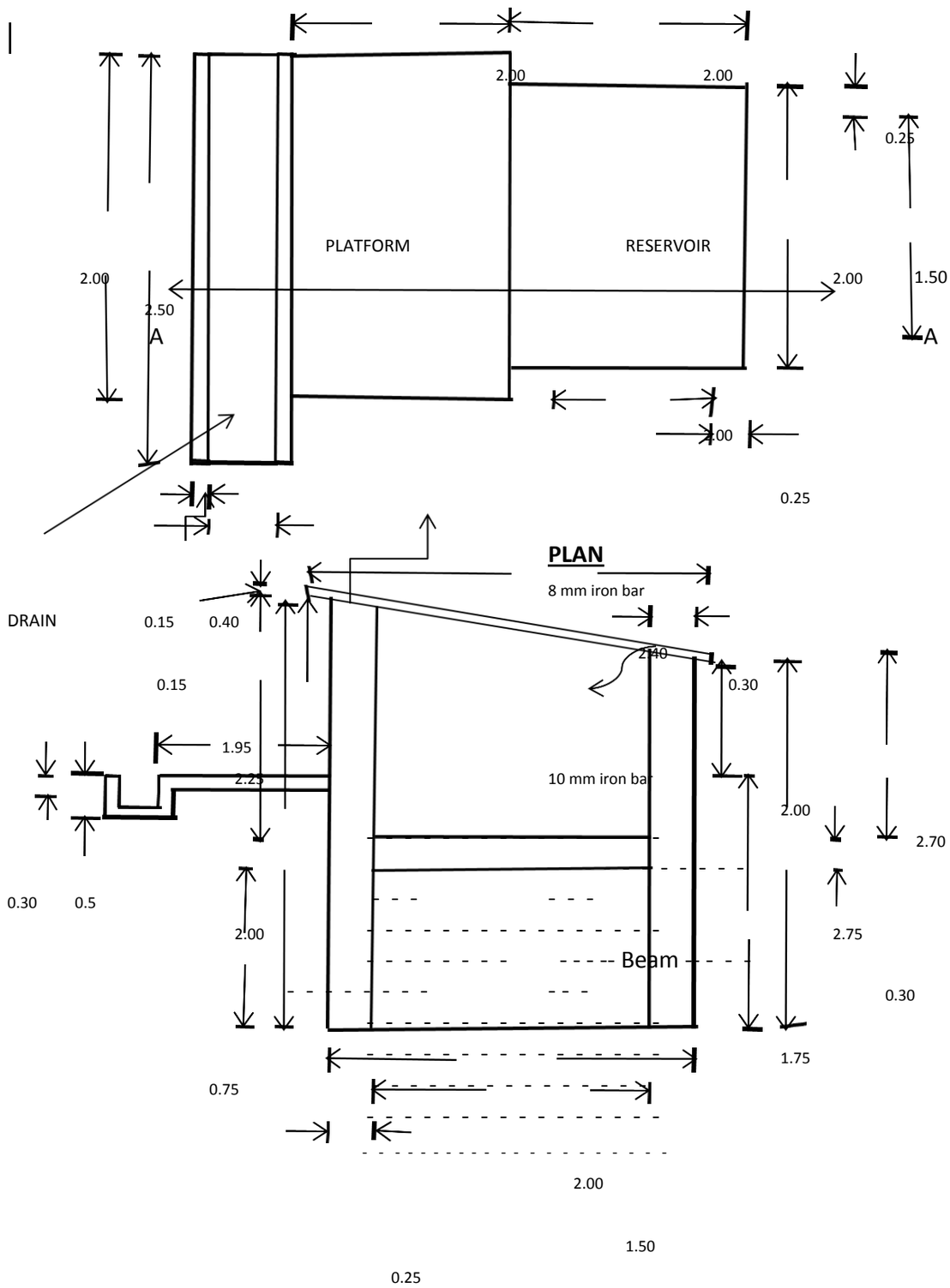

CROSS - SECTION AT "AA"

All dimensions are in metre

Submitted

,

ANNEXURE IV

MoA, SUB COMMITTEE DETAILS ETC.

SANJAY GOYAL, IAS
DISTICT MAGISTRATE
WEST GARO HILLS DISTRICT,
TURA, MEGHALAYA- 794001

Phone: 03651-223835(O), 223826(R)
Fax: 03651-221179, 222226
e-mail: sanjaygoyal_ias@yahoo.com

TO WHOM IT MAY CONCERN

This is to certify that centrally sponsored schemes like NREGS, BRGF, RKVY, NRHS and Total Sanitation Campaign etc can be convered with Watershed Projects/Programmee within West Garo Hills District.

Dated : Tura
The 14th April, 2011.

DEPUTY COMMISSIONER WEST GARO HILLS TURA

(Sanjay Goyal)
Deputy Commissioner,
West Garo Hills Dist, Tura.

ABSTRACT OF PERSPECTIVE PLAN FOR CONVERGENCE OF MNREGS WITH IWMP AT SARINGRE VILLAGE UNDER ARIM MICRO WATERSHED, WGH - IWMP - V

Name of Village : Saringre

Total No. of Job Card Holder : 15 nos.

Total Wage Component @ Rs. 100/- per day per annum ..... Rs. 150000.00

Amount earmarked for convergence per annum ..... Rs. 135000.00

(Figures in lacks)

S. No.	Activities	Units	Project Period												Total			Mandays to be generated
			2013- 2014			2013 - 2014			2014 - 2015			2015- 2016						
			Phy.	Fin.		Phy.	Fin.		Phy.	Fin.		Phy.	Fin.		Phy	Fin.		
				Wages	Materia		Wages	Material		Wages	Material		Wages	Materia		Wages	Material	
1	Dug out Pond @ Rs. 65000/- per no	no.	1	0.60	-	-	-	-	-	-	-	-	-	-	1	0.60	-	600
2	Rubber Plantation @ Rs.15000/- per Ha.	Ha.	5	0.30	0.45	-	-	-	-	-	-	-	-	-	5	0.30	0.45	300
	GRAND TOTAL			0.90	0.45											0.90	0.45	900

Amount allocated for convergence for the period 2012 - 13 to 2015 - 16.

1. Wage Component ---------- Rs. 0.90
2. Material Component ---------- Rs. 0.45

Grand Total. Rs. 1.35

(Rupees one lakh thirty five thousand) only.

Chairman
Saringre V.E.C.
West Garo Hills.

Secretary
Saringre V.E.C
West Garo Hills.

AGREEMENT FOR CONVERGENCE OF SCHEME

The Village Employment Council (VEC) and the communities of Saringre village under Rongram C. & R. D. Block, West Garo Hills, Meghalaya have no objection to the convergence of MNREGS with Integrated Watershed Management Project (IWMP) at Saringre village under Arim Micro Watershed - WGH - IWMP being implemented by Tura Soil & Water Conservation (T) Division, west Garo Hills.

We also agreed to allocate and commit funds for wages as well as material component under MNREGS in our Annual Work Plan for various Soil & water conservation works which shall be taken up during the Project period (2012-2013 to 2015-2016). The wages and material component under MNREGS shall be utilised for the following works;

1. Rubber Plantation 5.00 Hectare.
2. Dug Out Pond 1 no.

Chairman,
Saringre V.E.C.
Rongram C.& R. D. Block,
west Garo Hills.

Secretary,
Saringre .V.E.C.
Rongram C.& R. D. Block,
West Garo Hills.

ABSTRACT OF PERSPECTIVE PLAN FOR CONVERGENCE OF MNREGS WITH IWMP AT WAKRINTONGGRE VILLAGE UNDER ARIM MICRO WATERSHED, WGH - IWMP - V

Name of Village : Wakrintonggra

Total Nos. of Job Card Holder : 35 nos.

Total Wage Component @ Rs. 100/- per day per annum ..... Rs. 350000.00

Amount earmarked for convergence per annum ..... Rs. 325000.00

(figures in lakhs)

Sl. No.	Activies	Unit	Project Period												Total			Mandays to be generated
			2013- 2015			2013 2014			2014 - 2015			2015- 2016						
			Phy.	Fin.		Phy.	Fin.		Phy.	Fin.		Phy.	Fin.		Phy.	Fin.		
				Wages	Material		Wages	Material		Wages	Material		Wages	Material		Wages	Material	
1	C.C. Irri. Com @ Rs. 250000/- per no.	no.	1	1.00	1.50	-	-	-	-	-	-	-	-	-	1	1.00	1.50	1000
2	Rubber Plantation @ Rs.15000/- per Hs.	Hs.	5	0.30	0.45		-	-	-		-	-	-		5	0.30	0.45	500
	Grand Total			1.30	1.95											1.30	1.95	1500

Amount allocated for convergence for the period 2012 - 13 to 2015 - 16.

1. Wage Component ---------- Rs. 1.30
2. Material Component ---------- Rs. 1.95

Grand Total Rs. 3.25

(Rupees three lakh twenty five thousand) only.

Secretary
V.E.C.

AGREEMENT FOR CONVERGENCE OF SCHEME

The Village Employment Council (VEC) and the communities of Wakrintonggre village under Rongram C. & R. D. Block, West Garo Hills, Meghalaye have no objection to the convergence of MNREGS with Integrated Watershed Management Project (IWMP) at Wakrintonggre village under Arim Micro Watershed - WGH - IWMP - V being implemented by Tura Soil & Water Conservation (T) Division, west Garo Hills.

We also agreed to allocate and commit funds for wages as well as material component under MNREGS in our Annual Work Plan for various Soil & water conservation works which shall be taken up during the Project period (2012-2013 to 2015-2016). The wages and material component under MNREGS shall be utilised for the following works;

1. Rubber Plantation 5.00 Hactare.
2. C.C. Irrigation Dam 1 no.

Chairman
V.E.C. Wakrintonggre

Chairman,
Wakrintonggre V.E.C.
Rongram C.& R. D. Block,
west Garo Hills.

Secretary
V.E.C. Wakrintonggre
West Garo Hills

Secretary,
Wakrintonggre .V.E.C.
Rongram C. & R. D. Block,
West Garo Hills.

Subendra Ch. Marak
Nokma
Wakringtonggre III-33(10a)
P.O. Jengjal
Dist. West Garo Hills
Meghalaya.

COUNCIL OF NOKMAS ★ HQ. TURA, MEGHALAYA ★

Date 20-01-2011

WAKRINGTONGGRE ★ WEST GARO HILLS

NO OBJECTION CERTIFICATE

Anga Shri Subendra Ch Marak, Wakringtonggre songni nokma aro angni Chra-depante deme-chik chawarirang iano indake see parake on. enga, Chongmotan, Soil & Water Conservation (T) Departmentni ra. ba enggipa Integrated Watershed Management Project (IWMP) schemeko Chingni songo chusohatani bidingo Chinga mamrenglea Champengani dongjawa

Ia schemeni ningo dingdingdingtang kamrangko ka. ani ramangni dongimin niam gita chinga jaikgen aro departmentko mamreng dakeba mat-mangjawa aro on. gim in kamrangko an. tangtangni bil jakchin ka. gen ine kurachake iano see on. enga.

Name & Signature of Aking Nokma with seal.

Subendra Marak
S. Ch. Marak
Nokma III-33 (10a)
Wakringtonggre
West Garo Hills.

Name & signature of Chra & depante of the village. Sig.

1. Shri Hildeerth Sangma G Sangma
2. " Avenish Sangma
3. " Jangrak Sangma T Sangma
4. " Jolan Marak. Jolan
5. Smt. Ailin Sangma. A Sangma
6. Noel Marak

BENEFICIARY LIST UNDER ARIM MICRO WATERSHED (IWMP) -2011.

1	2	3	4	5	6
Sl. No.	Beneficiary's Name	Location	Nature of work	Nos./unit	GPS Location
1	" Krebilson Marak	Kera stream, Wakringtonggre	Irrgation Dam	1	25° 35" 19.5' - 90° 20" 51.5'
2	" Grebilson Marak	Wakringtonggre	W/Harvesting Farm Pond	1	25° 34" 56.2' - 90° 19" 46.9'
3	Shri. Totan Marak	Rongbilbang stream, Wakringtonggre	Irrigation Dam	1	25° 34" 49.8' - 90° 19" 56.9'
4	" Repen Sangma	Wakringtonggre	Protection Wall	1	25° 34" 52.3' - 90° 19" 55.5'
5	" Salani Sangma	Wakringtonggre	C. C. Channel	1	25° 34" 56.5' - 90° 20" 00.0'
6	" Wilberth Marak	Wakringtonggre	C. C. Channel	1	25° 34" 53.4' - 90° 20" 01.7'
7	" Sampel Marak	Wakringtongggre	Water Distribution Channel	1	25° 34" 57.9' - 90° 20" 09.5'
8	" Arnish Sangma	Wakringtongggre	Irrigation Dam	1	25° 35" 28.2' - 90° 20" 00.5'
9	" Arnish Sangma	Wakringtongggre	C. C. Channel	1	25° 35" 29.0' - 90° 19" 54.3'
10	" Arnish Sangma	Wakringtongggre	Protection wall	1	25° 35" 29.5' - 90° 19" 55.5'
11	" Suben Marak	Wakringtonggre	Dug Out Pond	1	25° 35" 28.4' - 90° 19" 55.4'
12	" Gilberth Sangma	Rongdot stream, Wakringtonggre	Irrigation Dam	1	25° 35" 35.4' - 90° 19" 56.4'
13	" Gilberth Sangma	Wakringtonggre	Protection Wall	1	25° 35" 37.4' - 90° 19" 56.0'

1	2	3	4	5	6
Sl. No.	Beneficiary's Name	Location	Nature of work	Nos./unit	GPS Location
14	" Sengkal Sangma	Wakringtonggre	Protection Wall	1	25° 35" 38.8' - 90° 19" 54.0'
15	" Busolin Sangma	Rongpot stream, Wakringtonggre	W/H Farm Pond	1	25° 35" 42.2' - 90° 19" 53.3'
16	" Hanatson Sangma	Rongpot stream, Wakringtonggre	W/H Farm Pond	1	25° 35" 51.9' - 90° 19" 53.7'
17	" Balmenson Sangma	Rongpot stream, Wakringtonggre	W/H Farm Pond	1	25° 36" 09.0' - 90° 19" 42.2'
18	" Nebaros Sangma	Wakringtonggre	Protection Wall	1	25° 35" 46.2' - 90° 20" 00.4'
19	" Bronson Sangma	Wakringtonggre	Dug Out Pond	1	25° 35" 43.4' - 90° 20" 03.5'
20	" Chajing Marak	Wakringtonggre	Dug Out Pond	1	25° 35" 48.0' - 90° 20" 07.8'
21	" Labington Marak	Wakringtonggre	Dug Out Pond	1	25° 35" 44.6' - 90° 20" 11.2'
22	" Megen Marak	Wakringtonggre	Dug Out Pond	1	25° 35" 41.1' - 90° 20" 14.9'
23	" Rengnat Marak	Saringre	W/Harvesting Farm Pond	1	25° 35" 38.5' - 90° 20" 21.3'
24	Community	Wakrintonggre	Rubber Pltn.	1	25° 35" 27.0' - 90° 20" 39.1'